AKD 834

The

MIDGET

(Series "TD")

SERVICE PARTS LIST

MIDGET

(Series "TD")

SERVICE PARTS LIST

SECOND ISSUE

THE PART NUMBER OF THIS LIST, WHICH SHOULD BE QUOTED WHEN A COPY IS ORDERED, IS AKD 834

Issued by

B.M.C. SERVICE LIMITED

COWLEY, OXFORD, ENGLAND

Telephone	Oxford 77777
Telex	B.M.C. Serv., Oxford 15625 and 15626
Telegrams	Mowog, Telex, Oxford
Cables	Mowog, Oxford
Codes	Bentley's, Bentley's Second Phrase, A.B.C. (5th and 6th Editions), Western Union and Private

JUNE 1958

INSTRUCTIONS FOR ORDERING PARTS

In addition to showing our Factory part number, the plate illustrations have been lettered and numbered in numerical sequence so that the illustrations may be readily coupled up with the printed description of parts. **We reserve the right to make changes or improvements in the construction or equipment of our products at any time without incurring the obligation to install such changes on any cars previously sold.** It is our policy to adopt such improvements as soon as the advisability of making them has been thoroughly demonstrated.

Export items that differ from Home are suffixed by the letter **(E)** immediately after the description, and if peculiar to left-hand-drive only, by the letters **(LHD)**.

We would draw your attention to the fact that you will get quicker service if you place all your orders with our Distributors in your territory, who are holding very adequate stocks of M.G. Service Parts. The name and address of the nearest Distributor or Dealer is given in the Owner's Handbook supplied with the car, and we feel sure that all your requirements will receive every consideration and attention.

We cannot stress too highly the danger of fitting spurious parts to M.G. cars, and strongly advise all M.G. owners to insist that for all repairs and replacements only genuine M.G. parts are fitted.

In order to ensure prompt attention and correct execution of orders the following instructions should be carefully carried out. Always state:

(*a*) MODEL, e.g. M.G. Midget (Series TD).
(*b*) CHASSIS NUMBER AND ENGINE NUMBER, INCLUDING PREFIX LETTERS.
(*c*) PART NUMBER and DESCRIPTION as given in this list.
(*d*) QUANTITY of each part required.
(*e*) Definite FORWARDING INSTRUCTIONS, i.e. Post, Passenger, or Goods Train.

In telegraphing, use the part number and give the CHASSIS NUMBER; always CONFIRM YOUR TELEGRAM BY LETTER OR ORDER at once. Give sufficient postal address for a parcel to find you. If away from home give your HOME ADDRESS IN ADDITION to dispatching instructions. Remember when sending a telegraphic money order that YOUR NAME AND ADDRESS MUST BE TELEGRAPHED AS A MESSAGE. If this is not done the order will arrive without any indication of the sender, as your signature on the back of the telegram is not telegraphed.

The following abbreviations may be used when telegraphing orders:

AIRWAYS.	Send by air mail.
PASSENGER.	Send by passenger train.
POST.	Send by parcel post.
PASSCALL.	Send by passenger train, to be called for at station.
GOODS.	Send by goods train.

Always write the quantity of any particular part required.

The prefix letters in front of part numbers should always be quoted.

In cases where there is any doubt send the old part as a pattern, CARRIAGE PAID, clearly labelled with your name and address and endorsed " PATTERN ".

INSTRUCTIONS FOR ORDERING PARTS—*continued*

CLAIMS FOR SHORTAGES, ETC.

All shipments are presumed complete, perfectly packed, and in good order. When a damaged shipment is received claim should be made immediately against the transportation company from whose hands shipment was taken. All claims for shortages or errors in packing must be made immediately upon receipt of shipment, and the contents note number must always be quoted.

PROPRIETARY FITTINGS

The Company fits only the highest-grade and best-known proprietary fitments, but it gives no warranty whatsoever in respect of tyres, lamps, distributors, electrical equipment, speedometers, clocks, or any other proprietary fittings of any type supplied with its car or otherwise, inasmuch as such proprietary fittings are usually covered by a warranty issued by their respective manufacturers; therefore **all questions involving the replacement or repair of any such proprietary fittings on Home cars under Warranty should be taken up direct with the manufacturers concerned and not with B.M.C. Service Limited. In the case of Exported cars ALL communications should be addressed to Nuffield Exports Limited, Cowley, Oxford, England.**

We are continuing to list and execute direct orders for new proprietary parts as detailed in such list, and your orders should be submitted direct to B.M.C. Service Limited or, in the case of Exported cars, to Nuffield Exports Limited and not to the actual manufacturers.

CLAIMS UNDER WARRANTY

Claims for replacement or rectification of M.G. parts under the Warranty should be submitted through an Authorized M.G. Distributor or Dealer, and it is advisable that a full technical report should accompany the alleged defective part.

REPLACEMENT UNIT SCHEMES

Where Service Replacement Units are available this is clearly indicated by a bold letter **(R)** against the item at the end of the "description" line. Details of these and the terms and method of replacement are published in the local press and trade periodicals. You are advised to consult the local Distributor or Dealer for full details.

In order that parts returned can readily be coupled with the letter of advice and report such PARTS MUST BE CLEARLY LABELLED WITH THE CHASSIS AND ENGINE NUMBERS and forwarded CARRIAGE PAID to the nearest Authorized M.G. Distributor or Dealer.

REPAIRS AND PATTERNS

Parts sent for repair or as patterns must have carriage charges prepaid, and should be similarly labelled with the sender's name and address for ready identification with the letter of advice. Full instructions as to disposal of scrap parts must be given.

IMPORTANT

It should be noted that each assembly (or sub-assembly) detailed in this list is shown at the commencement of each assembly, and it is emphasized that such assembly (or sub-assembly) can only be supplied complete with its components when ordered against the assembly (or sub-assembly) number. It will be appreciated, however, that the individual components of the assembly listed can themselves be supplied separately if ordered against their individual part numbers.

Example: Page C.3

PETROL TANK AND PIPES

Petrol tank complete	**1**	**136811**
Drain plug—petrol tank	1	AJJ55
Washer—drain plug and main feed	2	ARJ539

IMPORTANT

B.M.C. SERVICE PARTS

When purchasing replacement parts or having repairs done owners are requested to see that a label similar to the one illustrated here is attached to the invoice rendered. These labels are issued by the Company and constitute a guarantee that genuine parts are supplied.

No better vehicle maintenance service exists in the world than that provided by the manufacturers and no vehicle demands less attention, but it is unfair to the manufacturers to expect the

continuance of their support if the structure of the vehicle has been disturbed by the use of replacements that are not genuine B.M.C. parts. Replacement parts that are not of genuine B.M.C. manufacture cannot be relied upon to be of B.M.C. specification, material, and workmanship, and therefore the manufacturers cannot be expected to extend their Warranty to vehicles which have been fitted with parts not of their manufacture.

All Authorized B.M.C. Distributors and Dealers are under contract to supply only genuine B.M.C. parts.

GROUP INDEX

SECTION A

	Page
Chassis Frame	A.2
Front Suspension	A.3
Front Hydraulic Dampers	A.4
Rear Axle	A.5
Rear Springs	A.6
Propeller Shaft	A.6, A.7
Rear Hydraulic Dampers	A.7
Wheels	A.8

SECTION B

Steering Gear	B.2
Steering Column	B.2, B.3
Steering Wheel	B.3

SECTION C

Radiator	C.2
Exhaust System	C.2
Petrol Tank	C.3
Petrol Pipes	C.3

SECTION D

Brake Pedal and Details	D.2
Clutch Pedal and Details	D.2
Controls	D.3
Accelerator Pedal	D.3

SECTION E

Master Cylinder and Tank Assembly	E.2
Hose Assembly	E.2
Brake Pipes	E.2
Brake Gear—Front Axle	E.3
Brake Gear—Rear Axle	E.4
Hand Brake	E.4

SECTION F

Power Unit	F.2
Engine Mounting	F.2
Cylinder Block	F.2
Tappet Inspection Cover	F.3
Timing Chain Case and Tensioner	F.3
Pistons	F.4
Connecting Rods	F.4
Crankshaft	F.4
Crankshaft Main Bearings	F.4

SECTION F—*cont.*

	Page
Flywheel	F.4
Camshaft	F.4
Camshaft Bearings	F.4
Timing Chain	F.5
Cylinder Head and Valve Gear	F.5, F.6
Tappets	F.6
Manifold—Induction and Exhaust	F.6
Service Gasket Kits	F.7

SECTION G

Engine Oil Sump and Details	G.2, G.3
Engine Oil Filter	G.2, G.3
Engine Oil Pump	G.3
Oil Pipe Details	G.2
Water Pump	G.4
Fan	G.5
Thermostat	G.5

SECTION H

Clutch	H.2
Gearbox	H.2, H.3, H.4, H.5
Gearbox Remote Control	H.5

SECTION J

Carburetters	J.2
Air Cleaner	J.2
Petrol Pump	J.2

SECTION K

Dynamo	K.2
Starter	K.2
Distributor	K.2, K.3, K.8
Electrical Equipment and Instruments	K.3
Instrument Panel	K.3
Ammeter	K.3
Speedometer	K.4
Revolution Counter and Clock	K.4
Oil Gauge	K.4
Harness Cable	K.5
Battery	K.5
Horns	K.5
Ignition Coil	K.5
Regulator Box	K.5

GROUP INDEX—*continued*

SECTION K—*cont.*

	Page
Fusebox	K.6
Windscreen Wiper	K.6
Lamps	K.6, K.7
Fog Lamp	K.7

SECTION L

Number-plates	L.2
Bumpers	L.2
Wings	L.2
Running-boards	L.3
Front Apron	L.3
Rear Valance	L.3
Bonnet	L.3
Spare Wheel Carrier	L.4

SECTION M

Dashboard	M.2
Propeller Shaft Tunnel	M.2
Gearbox Cover	M.2
Body Details	M.2
Doors	M.3
Seats	M.3
Fascia Board	M.3
Windscreen	M.4
Hood	M.4

SECTION M—*cont.*

	Page
Side-curtains	M.4
Driving Mirror	M.5
Tonneau Cover	M.5
Floorboards	M.6
Carpets	M.6

SECTION N

Tool Kit	N.2
Special Tools	N.2

SECTION P

Luggage Carrier	P.2
Mirror (External)	P.2
Double Spare Wheel Carrier	P.2
Badge Bar	P.2
Extra Shock Absorbers	P.2, P.3
Alternative Rear Axle Ratio	P.3

SECTION Q

Supplement (L.H.D. Export)

SECTION R

MARK II
Supplement to M.G. Midget (Series TD)

NUMERICAL INDEX

The following is a complete index of parts in this list, giving the page reference of each part number. Standard bolts, nuts, washers, etc. have only the first page number on which they appear.

Part Number	Page	PMG Number
A912	K.6	
A1079/1	J.2	
A1311/1	R.2	
A1337	N.2	
A1385	R.2	
A1395	R.3	
A2339	R.4	
A2340	R.4	
A2342	A.5	
A2370	A.5	
A2376	R.4	
A2377	R.4	
ACA4010	A.3	
ACA5000	A.6	
ACA5122	A.3	
ACA5122	B.2	
ACA5217	N.2	
ACA5240	E.4	
ACA5242	A.6	
ACA5243	M.2	
ACA5244	B.2	
ACA5245	B.2	
ACA5246	B.2	
ACA5247	B.2	
ACA5248	B.2	
ACA5249	B.2	
ACA5250	B.2	
ACA5255	E.4	
ACA5301	B.2	
ACA5302	B.2	
ACA5304	B.2	
ACA5359	D.2	
ACA5379	F.2	
ACA6005	B.2	
ACA6031	B.2	
ACC8956	E.4	
ACC8958	E.4	
ACC8959	E.4	
ACC8960	E.4	
ACF4000	A.3	
ACF4000	A.4	
ACF4001	A.3	
ACF4001	A.4	
ACF4003	A.3	
ACF4003	A.4	
ACF4004	A.3	
ACF4004	A.4	
ACF4007	A.3	
ACF4007	A.4	
ACG4030	A.3	
ACG4031	A.3	
ACG4032	A.3	
ACG5030	K.6	
ACG5031	K.6	
ACG5032	K.7	
ACG5033	K.7	
ACG5034	K.6	
ACG5232	A.6	
ACG5283	N.2	
ACG6005	A.3	
ACH5835	L.2	
ACH8529	R.3	
ACH8650	K.5	
ADA803	K.3	
ADG722	M.5	
ADG1668	B.2	
ADG1681	B.2	
ADG1682	B.2	
ADP104	A.5	
ADP116	A.5	
AEB149	F.3	
AEB151	G.4	
AEB156	G.4	
AEB3027	H.2	
AEB3028	H.2	
AEC82	K.2	
AEC346	G.4	
AEC388	F.6	
AEC699	G.2	
AEC765	F.4	
AEC3179	H.3	
AEC3181	H.3	
AEC3182	H.3	
AEC3187	H.4	
AEC3188	H.4	
AEC3189	H.4	
AEC3202	F.2	
AEF131	F.4	
AEF135	H.3	
AEF136	G.4	
AEF137	H.2	
AEG5	F.2	
AEG125	F.3	
AEG126	F.3	
AEG126	G.2	
AEG127	F.6	
AEG385	H.4	
AEG3101	F.4	
AEG3102	H.4	
AEG3103	H.5	
AEG3104	H.5	
AEG3105	H.5	
AEG3106	H.5	
AEG3107	H.4	
AEG3122	G.2	
AEG3123	H.5	
AEG3124	H.5	
AEH550	F.3	
AEK113	F.5	
AEK113	R.2	
AFH3739	M.5	
AFN106/N	A.5	
AHH5457	R.4	
AJB5068	K.2	
AJC5065	K.4	
AJD20	E.2	
AJD20	Q.2	
AJD46	E.2	
AJD50	E.2	
AJD62	E.3	
AJD84	E.2	
AJD92	E.2	
AJD1204B	R.3	
AJD1444Z	L.2	
AJD1445Z	L.2	
AJD1546	L.3	
AJD6155	R.3	
AJD6158	R.3	
AJD6205N	G.2	
AJD6209Z	A.7	
AJD6212	A.4	
AJD6309	A.4	
AJD6310Z	A.4	
AJD6310Z	R.3	
AJD6315Z	A.4	
AJD6315Z	R.3	
AJD7153	L.4	
AJD7611	E.2	
AJD8012	R.3	
AJD8014	M.2	
AJD8104	K.3	
AJD8104Z	R.3	
AJD8106	R.3	
AJD8135Z	A.7	
AJD8135Z	L.3	
AJD8136Z	A.6	
AJD8204Z	R.3	
AJG4002	F.4	
AJG4003	F.4	
AJG400212	F.4	
AJG400220	F.4	
AJG400230	F.4	
AJG400240	F.4	
AJG400250	F.4	
AJG400312	F.4	
AJG400320	F.4	
AJG400330	F.4	
AJG400340	F.4	
AJH5193	E.3	
AJH5193	E.4	
AJH5292	J.2	
AJH5302	J.2	
AJH5303	J.2	
AJJ55	C.3	
AJJ82	C.2	
AJJ118	C.2	
AJJ119	C.2	
AJJ119	R.3	
AJJ142	C.2	
AJJ144	C.2	
AJJ145	C.2	
AJJ151	C.3	
AJJ190	R.2	
AJJ192	R.2	
AJJ193	R.2	
AJJ194	R.2	
AJJ195	R.2	
AJJ196	R.2	
AJJ197	R.3	
AJJ246	C.2	
AJJ247	C.2	
AJJ248	C.2	
AJJ279	N.2	
AJJ280	N.2	
AJJ281	N.2	
AJJ282	N.2	

NUMERICAL INDEX—*continued*

Part Number	Page	PMG Number
AJJ402	A.7	
AJJ404	M.2	
AJJ507	M.6	
AJJ508	M.6	
AJJ509	M.6	
AJJ512	M.6	
AJJ575	N.2	
AJJ578	N.2	
AJJ580	N.2	
AJJ582	N.2	
AJJ584	N.2	
AJJ602	Q.2	
AJJ605	R.2	
AJJ649	R.2	
AJJ1413	C.2	
AJJ2785	G.5	
AJJ3031	L.2	
AJJ3031	L.3	
AJJ3126	M.4	
AMK739	F.3	
AMK739	G.4	
AMK804	F.4	
AMK5607	K.6	
AMK5608	K.6	
AMK9958	N.2	
ANK4646	K.3	
ARG920	C.2	
ARJ539	C.2	
ARJ539	C.3	
ATA7043	A.5	
ATA7047	A.5	
ATB4069	A.3	
ATB4097	A.3	
ATB4097	A.4	
ATB4097	A.6	
ATB4098	A.3	
ATB4098	A.4	
ATB4100	A.3	
ATB4100	A.4	
ATB4100	A.6	
ATB4100	L.4	
ATB4129	A.4	
ATB4162	A.3	
ATB4162	A.4	
ATB4162	A.6	
ATB4163	A.3	
ATB4163	A.4	
ATB4163	A.6	
ATB4163	L.4	
ATB4206	A.3	
ATB4207	A.3	
ATB4208	A.3	
ATB4209	A.3	
ATC7461	A.5	
ATC7464	A.5	
ATC7481	A.6	
ATC7482	A.5	
ATC7483	A.5	
ATC7488	A.5	
ATC7489	A.5	
ATC7510	A.6	
ATC7511	A.6	
AUA425	J.2	
AUA425	R.3	
AUA839	J.2	
AUA1466	J.2	
AUA1478	J.2	
AUC549	J.2	
AUC578	R.2	
AUC1832	C.3	
AUC1832	R.3	
AUC2108	J.2	
AUC2113	R.2	
AUC2156	J.2	
AUC2256	J.2	
AUC2269	J.2	
AUC2673	J.2	
AUC4334	J.2	
AUC4612	J.2	
BDH593	A.8	
BLS108	H.5	
BLS110	H.3	
BLS110	H.4	
CA880	H.2	
CA1005	H.2	
CA1009	F.4	
CA1030	F.6	
CA1043	F.2	
CA1056	F.2	
CA1095	K.2	
CA1122	K.2	
CA1126	D.2	
CA1215	H.2	
CA1254	F.3	
CA1258	F.6	
CA1263	F.3	
CA1281	G.5	
CA1282	F.3	
CA1283	D.2	
CA1284	F.6	
CA1605	F.6	
CA1614	F.5	
CB1717	F.6	
CB1729	F.3	
CB1979	H.4	
CB2257	K.3	
ET140	N.2	
ET141	N.2	
ET142	N.2	
FNN412	A.3	
FNN2412	A.3	
H6001	C.2	
H7467	K.4	
H7467	P.3	
HPS0405	G.2	
JA4677	G.4	
JA5052	D.2	
JA5088	G.4	
JA5255	F.4	
JA5308	G.4	
JA5384	F.2	
JA5411	F.2	
JA5732	G.4	
JA5890	G.2	
JB5968	F.2	
JB5968	H.2	
LA7071	H.5	
LA7088	F.6	
LA7104	F.2	
LA7153	F.6	
LA7155	G.3	
LA7171	J.2	
LA7185	F.6	
LA7185	H.5	
LA7236	H.4	
LA7281	H.2	
LA7281	R.3	
LA7395	H.3	
LA7417	G.3	
LA7417	H.5	
LA7431	G.2	
LA7469	R.2	
LNN206	A.6	
LWN103	R.3	
LWZ204	R.3	
LWZ206	R.3	
MA3641	H.4	
MA3650	H.4	
MA3678	H.2	
MA3839	H.3	
MB15831	M.3	
MB19322	M.3	
MB19326	M.2	
MB19327	M.2	
MB19329	M.3	
MB19331	M.3	
MB19506	M.3	
MB19507	M.2	
MB19553	M.4	
MB20173	M.4	
MB20174	M.4	
MB20175	M.4	
MB20176	M.4	
MB20177	M.4	
MB20190	M.2	
MB20192	M.2	
MB20193	M.2	
MB20216	M.4	
MB20856	M.3	
MB21873	M.3	
MB21874	M.2	
MB21875	M.3	
MB21876	M.2	
MB21884	M.3	
MB21885	M.4	
MB21886	M.3	
MB21951	M.2	
MB21952	M.2	
MB21957	M.3	
MB21958	M.3	
MB21959	M.3	
MB21960	M.4	
MB21993	M.3	
MB21994	M.3	
MB21995	M.4	
MB21996	M.4	
MB22001	M.3	
MB22002	M.2	
MB22029	M.2	
MB22030	M.2	
MB22034	M.4	
MB22035	M.4	
MB22036	M.3	
MB22037	M.3	
MB22038	M.3	

NUMERICAL INDEX—*continued*

Part Number	Page	PMG Number
MB22041	M.2	
MB22042	M.2	
MB22043	M.4	
MB22057	M.4	
MB22060	M.4	
MB22061	M.4	
MB22062	M.4	
MB22063	M.4	
MB22064	M.4	
MB22065	M.4	
MB22066	M.4	
MB22067	M.4	
MB22068	M.4	
MB22108	M.3	
MB22124	M.4	
MB22157	M.4	
MB22169	M.4	
MB22174	M.4	
MB22209	M.5	
MB22211	M.3	
MB22212	M.3	
MB22248	M.2	
MB22251	M.5	
MB22379	M.2	
MB22380	Q.3	
MB22391	M.5	
MB22392	M.5	
MB22423	M.4	
MB22452	M.4	
MB22453	M.4	
MB22454	M.4	
MB22455	M.4	
MB22456	M.5	
MB22457	M.5	
MB22467	M.5	
MB22468	M.4	
MB22469	M.5	
MB22470	M.5	
MB22471	M.5	
MB22485	M.4	
MB22486	M.4	
MB22487	M.4	
MB22488	M.4	
MB22504	M.2	
MB22505	Q.3	
MB22505	Q.4	
MB22520	M.3	
MB22612	M.5	
MB22613	M.4	
MB22614	M.4	
MB22615	M.4	
MB22616	M.4	
MB22617	M.5	
MB22641	M.5	
MB22642	M.5	
MB22643	M.5	
MB40047	M.4	
MB40068	M.3	
MB50215	M.6	
MB50219	M.6	
MB50220	M.6	
MB50221	M.6	
MB50222	M.6	
MB50228	M.6	
MB50229	M.6	
MB50230	M.6	
MB50231	Q.4	
MB50232	Q.4	
MB50234	M.6	
MG516/1	L.3	
MG516/2	L.3	
MG862/52	F.7	
MG862/92	R.4	
MG862/98	R.4	
MG862/99	R.4	
MG862/445	G.2	
MG866/1	C.2	
NMS1/3	A.5	
NMS94/25	D.2	
OA10077	F.3	
OA10132	G.4	
OA10645	G.3	
OA10798	G.2	
OA10798	G.3	
PNN105	G.5	
PTZ804	L.2	
PWN105	J.2	
PWP105	L.4	
PWZ103	J.2	
PWZ105	J.2	
QA11093	K.2	
QA11123	F.6	
QA11200	H.5	
QA11347	K.3	
QA11359	G.5	
QA11682	G.2	
QA11801	G.5	
RA12104	H.5	
RA12161	F.3	
RA12175	G.4	
RA12178	G.4	
RA12179	G.4	
RFN118	Q.3	
SA1088	G.4	
SA1094/1	G.4	
SA1340	H.4	
SA2118	F.3	
SA2203/7	F.5	
SA2203/10	F.5	
SA2203/11	R.2	
SA2204/7	F.5	
SA2204/10	R.2	
SA2204/11	F.5	
SA2213/4	F.5	
SA2213/5	F.5	
SA2214/4	F.5	
SA2214/5	F.5	
SA2215/4	F.6	
SA2216/4	F.6	
SA2224/2	F.5	
SA2232/1	F.5	
SA2232/2	F.5	
SA2239/3	H.2	
SA2239/4	H.2	
SA2243/3	G.4	
SA2250	F.2	
SA2251/1	F.4	
SA2252/1	F.4	
SA2252/2	F.4	
SA2256	H.3	
SA2272	H.4	
SA2273	H.4	
SA2402/3	H.4	
SA2402/5	H.4	
SA2404/9	F.2	
SA2404/10	F.2	
SA2405	F.4	
SA2407/4	F.6	
SA2407/5	F.6	
SA2409	F.6	
SA2410	F.6	
SA2411/2	G.2	
SA2417/1	H.5	
SA2417/2	H.5	
SA2418/2	F.4	
SA2419/2	G.4	
SA2423/2	F.3	
SA2424/1	H.2	
SA2426	G.4	
SA2430	F.6	
SA2434/1	H.3	
SA2435/1	H.3	
SA2435/2	H.3	
SA2436	G.2	
SA2439/1	R.2	
SA2440	F.6	
SA2440/1	R.2	
SA2441	G.3	
SA2441/1	G.3	
SA2442/1	G.3	
SA2442/2	G.3	
SA2445	F.2	
SA2445/1	F.2	
SA2446	H.2	
SA2446/1	G.3	
SA2447	H.2	
SA2447/1	H.2	
SA2448	G.2	
SA2448	G.3	
SA2448/1	G.3	
SA2448/2	G.3	
SA2449	F.2	
SA2449/1	F.2	
SA2449/2	F.2	
SA2906/9	H.2	
SK957	R.3	
SK972	R.3	
SK998	R.4	
SK999	R.4	
SK1000	R.4	
SK1001	R.4	
SK1118	N.2	
SK2741	N.2	
TA13079	F.4	
TD21	M.6	
TD22	M.6	
TD23	Q.3	
TD23	Q.4	
TD24	Q.3	
TD24	Q.4	
TD26	Q.4	
TD36	M.3	
TD37	M.3	
TD38	M.3	
TD45	M.3	
TD46	M.3	
TD49	M.3	
TD81	M.3	
UFN1032	L.3	
UHN405	A.3	
W40067	Q.3	
W40067	Q.4	

NUMERICAL INDEX—*continued*

Part Number	Page	PMG Number
WGN012	J.2	
WGN012	R.2	
WKN506	A.3	
X679/26	F.6	
X15002	F.2	
X15009	F.3	
X15012	F.3	
X15016	F.2	
X15027	F.4	
X15029	F.4	
X15059	F.3	
X15096	G.2	
X15098	G.2	
X15126	F.6	
X15141	H.4	
X15175	F.5	
X15175	H.5	
X15176	H.4	
X15188	F.5	
X15188	R.2	
X15268	G.2	
X15269	G.2	
X15270	F.3	
X15270	G.2	
X15273	G.3	
X15336	F.3	
X15393	F.2	
X15424	F.4	
X15670	D.2	
X15868	H.2	
X17080	H.3	
X17186	H.4	
X17212	P.3	
X17212	R.4	
X17224	D.3	
X17260	H.4	
X17266	H.3	
X17313	H.3	
X17342	H.3	
X17343	H.3	
X17350	H.4	
X17356	H.5	
X19089	G.2	
X19090	G.2	
X19147	H.4	
X19171	H.4	
X19177	H.5	
X19216	F.5	
X19255	H.2	
X19257	H.2	
X19288	H.2	
X19325	H.2	
X19460	B.2	
X19460	G.4	
X19520	G.4	
X19524	G.5	
X20014	F.2	
X20036	F.5	
X20036	F.6	
X20048	F.5	
X20081	F.5	
X20128	F.5	
X20139	H.5	
X20167	F.2	
X20194	F.6	
X20247	F.2	
X20268	H.2	
X20298	H.5	
X20428	F.5	
X20429	F.5	
X20505	H.2	
X20690	F.3	
X20850	G.3	
X20931	G.5	
X21021	G.4	
X21027	F.5	
X21027	R.2	
X21044	F.2	
X21044	F.5	
X21090	G.3	
X21231	F.6	
X21406	F.2	
X21425	R.3	
X21625	G.4	
X22043	H.2	
X22050	G.4	
X22051	G.4	
X22124	F.6	
X22188	G.4	
X22197	H.5	
X22198	H.5	
X22253	G.4	
X22321	G.4	
X22324	F.4	
X22331	F.2	
X22332	F.3	
X22339	F.5	
X22362	H.3	
X22372	G.4	
X22377	H.3	
X22378	H.3	
X22383	K.3	
X22401	N.2	
X22403	G.3	
X22432	F.2	
X22438	F.6	
X22438	R.2	
X22515	F.2	
X22517	F.2	
X22518	F.2	
X22524	F.6	
X22526	F.6	
X22540	F.4	
X22542	F.5	
X22543	F.4	
X22546	F.5	
X22547	F.5	
X22548	F.5	
X22549	F.5	
X22549	R.2	
X22550	F.5	
X22551	F.5	
X22551	R.2	
X22571	F.5	
X22581	F.6	
X22588	G.4	
X22591	G.4	
X22592	G.4	
X22605	G.4	
X22607	G.4	
X22609	G.5	
X22626	H.2	
X22634	H.3	
X22635	H.3	
X22639	H.3	
X22644	H.3	
X22649	H.3	
X22650	H.3	
X22651	H.3	
X22653	H.3	
X22655	H.3	
X22657	H.4	
X22665	H.4	
X22671	H.4	
X22700	F.5	
X22700	F.6	
X22702	F.4	
X22715	F.2	
X22716	F.2	
X22724	G.2	
X22730	G.4	
X22731	G.4	
X22732	F.2	
X22733	F.4	
X22736	H.4	
X22742	F.4	
X22744	F.4	
X22748	F.2	
X22752	F.3	
X22755	F.5	
X22758	F.5	
X22759	F.3	
X22767	F.6	
X22767	G.2	
X22768	G.2	
X22773	G.2	
X22776	G.2	
X22780	G.3	
X22781	G.2	
X22782	F.6	
X22788	F.5	
X22788	R.2	
X22799	K.3	
X22817	H.2	
X22829	H.2	
X22838	G.4	
X22840	G.4	
X22848	H.4	
X22850	H.4	
X22851	H.4	
X22853	K.2	
X22885	H.3	
X22886	H.3	
X22889	H.4	
X22890	H.4	
X22892	H.4	
X22893	H.4	
X22895	H.4	
X22899	H.5	
X22900	H.4	
X22914	F.5	
X22915	F.5	
X22916	F.5	
X22916	R.3	
X22917	F.5	
X22924	G.4	
X22927	G.5	
X22928	G.5	
X22929	J.2	
X22947	F.4	
X22968	F.2	
X22973	G.2	
X22978	F.3	
X22997	F.3	
X23049	G.2	
X23054	G.2	
X23194	G.2	
X24006	F.4	
X24009	F.4	
X24010	F.4	
X24012	F.3	
X24032	H.5	
X24061	F.6	
X24063	F.5	
X24068	F.5	
X24069	F.5	
X24084	F.4	
X24086	F.5	

NUMERICAL INDEX—*continued*

Part Number	Page	PMG Number
X24086	R.2	
X24090	F.5	
X24090	R.2	
X24091	F.6	
X24093	F.4	
X24094	G.5	
X24103	F.4	
X24109	H.3	
X24110	H.3	
X24111	H.3	
X24112	H.3	
X24115	K.3	
X24118	G.4	
X24120	F.4	
X24130	F.3	
X24137	F.3	
X24138	F.3	
X24139	F.3	
X24148	G.2	
X24172	R.2	
X24180	F.3	
X24181	F.3	
X24185	G.3	
X24190	F.2	
X24190	G.5	
X24191	G.5	
X24192	G.5	
X24201	H.2	
X24202	G.2	
X24202	R.4	
X24204	G.2	
X24206	G.2	
X24208	G.2	
X24215	H.2	
X24216	H.3	
X24220	H.4	
X24230	F.3	
X24245	H.3	
X24248	H.3	
X24249	H.3	
X24250	H.3	
X24251	H.3	
X24254	H.3	
X24259	H.4	
X24261	F.3	
X24271	R.3	
X24277	J.2	
X24283	F.3	
X24285	G.4	
X24291	F.3	
X24294	G.2	
X24299	F.6	
X24355	F.3	
X24356	F.3	
X24359	G.2	

Part Number	Page	PMG Number
X24369	H.4	
X24373	F.6	
X24377	G.4	
X24377	H.4	
X24379	H.5	
X24380	H.5	
X24392	G.2	
X24396	D.2	
X24407	G.2	
X24408	F.2	
X24416	K.2	
X24417	K.2	
X24418	F.4	
X24419	K.2	
X24421	G.5	
X24423	H.5	
X24433	G.4	
X24434	G.4	
X24438	J.2	
X24439	F.6	
X24440	P.3	
X24440	R.4	
X24441	P.3	
X24441	R.4	
X24442	P.3	
X24442	R.4	
X24443	G.2	
X24444	G.2	
X24446	G.2	
X24447	G.2	
X24448	G.2	
X24449	H.4	
X24451	G.2	
X24457	H.5	
X24464	K.3	
X24465	H.3	
X24467	H.2	
X24468	K.2	
X24469	K.2	
X24471	R.2	
X24481	F.6	
X24482	H.2	
X25015	H.3	
X25040	G.2	
X25112	H.5	
X25138	G.2	
X25313	H.4	
X30130	G.4	
X30133	G.5	
X31173	K.3	
X31197	J.2	
X31197	R.3	
X31214	H.5	
X31214	J.2	
X31214	R.2	

Part Number	Page	PMG Number
X31399	H.2	
X31648	G.3	
X31648	J.2	
X35020	H.3	
X35063	J.2	
XPAG/TD	F.2	
XPAG/TD2	F.2	
XPAG/TD3	R.2	
1F9026	K.7	
1H779	G.3	
2A5393	A.7	
2H1069	K.3	
2H1150	K.7	
2H1697	N.2	
2H2331	K.5	
2H3827	K.3	
2H3837	K.3	
2H4440	K.3	
2H4442	K.7	
2H4444	K.3	
2H4732	K.4	
2H4743	K.6	
2H4743	K.7	
2H4743	P.2	
2H4817	K.7	
2H4915	K.7	
2H4929	K.5	
2H4969	K.3	
2H7954	K.6	
2K2124	H.5	
2K8686	E.2	
3H520	K.5	
3H550	E.3	
3H550	E.4	
3H713	K.5	
3H714	K.5	
3H921	K.6	
3H949	K.5	
3H949	K.6	
3H952	K.2	
3H1454	K.6	
3H1813	K.7	
3H1814	K.7	
3H1835	K.5	
3H1892	K.6	
3H1893	K.7	
3H1893	Q.3	
3H1894	E.2	

Part Number	Page	PMG Number
3H2006	F.6	
3H2287	E.2	
3H2287	E.3	
3H2287	E.4	
3H2296	R.3	
3H2724	F.2	
3H2962	K.8	
6K432	H.2	
7H23	G.3	
7H28	G.3	
7H30	G.3	
7H150	G.3	
7H151	G.3	
7H160	G.3	
7H161	G.3	
7H1442	G.3	
7H1448	M.3	
7H1785	A.4	
7H1788	A.7	
7H3001	H.2	
7H3008	H.2	
7H3057	H.2	
7H3060	H.2	
7H3061	H.2	
7H3065	H.2	
7H3067	H.2	
7H3069	H.2	
7H3071	H.2	
7H3073	H.2	
7H3078	H.2	
7H3080	H.2	
7H3085	H.2	
7H3140	H.2	
7H3146	H.2	
7H3171	H.2	
7H3185	H.2	
7H3193	H.2	
7H3197	H.2	
7H3213	H.2	
7H3214	H.2	
7H3215	H.2	
7H3216	H.2	
7H3218	H.2	
7H3246	H.2	
7H3565	B.2	
7H3863	A.6	
7H3865	A.6	
7H3874	A.7	
7H3877	A.7	
7H3878	A.7	
7H3879	A.7	
7H3880	A.7	

NUMERICAL INDEX—*continued*

Part Number	Page	PMG Number
7H3893	A.7	
7H5027	K.2	
7H5028	K.2	
7H5029	K.2	
7H5030	K.2	
7H5031	K.2	
7H5033	K.2	
7H5034	K.2	
7H5038	K.2	
7H5039	K.2	
7H5040	K.2	
7H5041	K.2	
7H5042	K.2	
7H5043	K.3	
7H5044	K.2	
7H5045	K.2	
7H5046	K.2	
7H5047	K.2	
7H5048	K.2	
7H5050	K.2	
7H5051	K.2	
7H5059	K.6	
7H5062	K.7	
7H5066	K.6	
7H5071	K.2	
7H5074	K.2	
7H5085	K.2	
7H5086	K.2	
7H5086	K.8	
7H5087	K.2	
7H5088	K.2	
7H5089	K.2	
7H5089	K.8	
7H5093	K.3	
7H5094	K.3	
7H5111	K.7	
7H5121	K.7	
7H5122	K.7	
7H5123	K.7	
7H5124	K.5	
7H5126	K.5	
7H5128	K.5	
7H5147	K.7	
7H5156	K.2	
7H5159	K.2	
7H5161	K.2	
7H5164	K.7	
7H5167	K.6	
7H5167	P.2	
7H5167	Q.3	
7H5182	K.7	
7H5183	K.7	
7H5184	K.7	
7H5185	K.7	
7H5191	P.2	
7H5196	K.6	
7H5216	K.5	
7H5217	K.7	
7H5231	K.3	
7H5291	K.5	
7H5297	K.7	
7H5320	K.7	
7H5320	P.2	
7H5365	K.7	
7H5365	P.2	
7H5367	K.6	
7H5368	K.6	
7H5369	K.6	
7H5376	K.2	
7H5388	K.2	
7H5483	K.6	
7H5484	K.7	
7H5485	K.6	
7H5486	K.7	
7H5522	K.5	
7H5527	K.2	
7H5539	K.7	
7H5595	K.3	
7H7016	E.2	
7H7022	E.2	
7H7025	E.2	
7H7064	N.2	
7H7355	E.3	
7H7355	E.4	
7H7368	E.3	
7H7368	E.4	
7H7402	E.2	
7H7435	E.2	
7H7436	E.2	
7H7484	E.2	
7H7485	E.2	
7H7487	E.2	
7H7488	E.2	
7H7489	E.2	
7H7490	E.2	
7H7553	G.3	
7H7847	E.3	
7H7923	E.3	
7H7923	E.4	
7H7925	E.2	
7H7926	E.2	
7H7927	E.4	
7H7928	E.4	
7H7929	E.4	
7H7930	E.3	
7H7930	E.4	
7H7931	E.4	
7H7932	E.4	
7H7934	E.2	
7H7939	E.3	
7H7939	E.4	
7H7940	E.3	
7H7940	E.4	
7H7942	E.4	
7H7973	E.4	
7H9830	K.4	
7H9866	M.6	
7H9867	M.6	
7H9870	M.5	
7H9871	M.5	
7H9872	M.5	
7H9873	M.5	
7H9874	M.5	
7H9875	M.5	
7H9877	M.5	
7H9913	M.3	
7H9914	M.2	
7H9914	M.3	
7H9920	M.3	
7H9921	M.3	
8G3000	A.6	
11G9093	K.6	
17H85	G.3	
17H86	G.3	
17H146	G.3	
17H150	G.3	
17H5001	K.5	
17H5002	K.5	
17H5003	K.5	
17H5042	K.7	
17H5042	P.2	
17H5055	K.2	
17H5065	K.2	
17H5065	K.8	
17H5069	K.3	
17H5069	K.8	
17H5071	K.8	
17H5095	K.3	
17H5095	K.8	
17H5122	K.5	
17H5167	K.7	
17H5225	K.6	
17H5244	K.7	
17H5336	K.5	
17H5403	K.6	
17H5403	K.7	
17H5403	Q.3	
17H5407	K.2	
17H5431	K.3	
17H5444	K.2	
17H5497	K.2	
17H5497	K.8	
17H5499	K.3	
17H5500	K.2	
17H5502	K.3	
17H5502	K.5	
17H5502	K.8	
17H5533	K.2	
17H5533	K.8	
17H5552	K.8	
17H6156	B.2	
17H7014	E.2	
17H7070	E.4	
17H7071	E.4	
17H7091	E.2	
17H7307	E.2	
17H7458	E.2	
18G279	N.2	
18G281	N.2	
18G309	N.2	
18G310	N.2	
18G311	N.2	
18G312	N.2	
18G314	N.2	
18G315	N.2	
18G325	N.2	
18G327	N.2	
18G351	N.2	
18G352	N.2	
18G353	N.2	
18G367	N.2	
18G371	N.2	
18G374	N.2	
27H2	C.2	
27H7	K.3	
27H7	Q.3	
27H10	K.4	
27H11	K.4	
27H12	K.4	
27H19	K.4	
27H19	Q.3	
27H20	K.4	
27H20	Q.3	
27H21	K.4	
27H21	Q.3	
27H22	Q.3	
27H23	K.4	
27H23	Q.3	
27H24	K.4	
27H25	K.4	
27H26	K.4	
27H27	K.4	
27H28	K.4	
27H29	K.4	
27H30	K.4	
27H52	G.5	

NUMERICAL INDEX—*continued*

Part Number	Page	PMG Number	Part Number	Page	PMG Number	Part Number	Page	PMG Number	Part Number	Page	PMG Number
27H55	G.5		27H7189	E.4		50938	C.2		81811	L.3	
27H197	G.5		27H7270	E.3		51134	K.5		81811	R.4	
27H209	K.4		27H7271	E.3		51181	K.5		81815	L.3	
27H210	K.4		27H7278	E.4		52186	Q.3		81851	C.3	
27H211	K.4		27H7281	E.3		52725	C.2		82092	L.3	
27H224	K.4		27H7282	E.3		53626	J.2		82093	L.3	
27H225	Q.3		27H7305	E.4		53626	R.3		82096	C.3	
27H226	K.4		27H7394	E.4		53627	J.2		82149	K.4	
27H5011	K.6					53627	R.4		82149	R.3	
27H5025	K.6		37H5058	K.3		53682	D.3		82200	D.2	
27H5026	K.7		37H5207	K.2		53853	A.3		82201	D.2	
27H5054	K.7		37H5381	K.7		53865	L.3		82572	D.3	
27H5054	P.2		37H5500	K.6		54347	K.5		82620	C.2	
27H5055	K.6					54348	C.3		83866	K.4	
27H5055	K.7		97H551	H.4		54348	R.3		83875	K.4	
27H5055	Q.3		97H558	A.3		54516	E.3		83987	A.6	
27H5059	K.3		97H558	A.4		54516	Q.2		84138	K.4	
27H5068	K.3		97H573	R.2		54693	R.3		84225	L.2	
27H5070	K.2		97H610	F.6		60464	M.2		84276	E.4	
27H5070	K.3		97H626	K.2		67257	K.3		84391	A.6	
27H5071	K.3		97H656	A.6		68593	E.3		84452	E.4	
27H5084	K.5		97H659	A.5		68597	E.3		84454	Q.2	
27H5087	K.6					68598	E.3		84495	R.4	
27H5089	K.6		485/D	L.3		68651	E.2		84578	K.4	
27H5101	K.6		958Z	A.5		68680	E.2		85601	L.2	
27H5106	K.3		1765	C.2		68683	E.2		86663	K.5	
27H5112	K.6		1781	D.3		68755	A.3		87025	L.3	
27H5139	K.3		2470	C.2		68755	A.4		91208	L.3	
27H5154	K.4		2470	R.4		68822	N.2		91213	K.4	
27H5190	K.7		3161	K.5		68839	N.2		91213	K.6	
27H5190	P.2		3452	E.4		68847	E.4		95098	E.3	
27H5191	K.7		3463	E.4		68893	N.2		95100	C.3	
27H5192	K.7		5088	K.5		68913	A.3		95100	K.5	
27H5193	K.7		5267	D.3		68913	A.4		95100	R.3	
27H5204	K.2		5270	D.3		68960	E.3		95102	K.4	
27H5212	R.3		5873	E.3		68960	E.4		95102	Q.3	
27H5223	K.3		7282	H.2		79151	E.3		95104	K.5	
27H5387	K.2		15273	G.4		79151	E.4		95141	C.2	
27H5420	K.2		19327	L.3		80492	K.5		95174	K.5	
27H5421	K.8		19354	M.3		80496	A.5		95276	C.3	
27H5422	K.8		19835	B.2		80497	A.5		95535	C.3	
27H5428	K.2		20160	M.3		80583	B.3		95608	A.6	
27H5429	K.2		31648	R.2		81199	F.2		95609	A.6	
27H5430	K.3		39371	E.2		81405	R.3		95618	C.2	
27H5432	K.6		39731	E.2		81620	L.2		95621	C.2	
27H6148	B.2		41273	N.2		81622	L.2		99545	C.3	
27H7143	E.2		41274	N.2		81728	C.2		99565	A.6	
27H7159	E.3		47318	B.2		81738	K.5		99612	R.3	
27H7159	E.4		47323	B.2		81738	P.3		99667	C.3	
27H7165	E.2		47324	B.2		81781	L.3		99693	A.6	
27H7166	E.3		47325	B.2		81782	N.2		100711	A.3	
27H7166	E.4		47327	B.2		81810	C.2		100711	A.4	
27H7167	E.3		47330	B.2		81810	L.3		101422	A.5	
27H7167	E.4		50232	R.3		81810	R.4		101523	A.5	
27H7189	E.3		50638	D.3		81811	C.2		101524	A.5	

NUMERICAL INDEX—*continued*

Part Number	Page	PMG Number
101525	A.5	
101527	A.5	
101528	A.5	
101529	A.5	
101535	A.5	
101538	A.5	
101548	A.6	
101550	A.6	
101551	A.6	
101552	A.6	
101558	A.5	
101574	A.5	
101593	R.4	
101772	P.2	
101777	A.5	
101791	A.6	
101856	A.5	
101862	A.5	
101866	A.5	
101872	A.6	
101874	A.5	
101892	A.3	
101892	A.4	
101897	A.3	
101897	A.4	
101898	A.6	
101902	A.5	
101910	R.4	
101952	A.5	
101985	A.5	
101988	A.5	
101989	A.5	
102219	A.5	
102224	A.6	
102231	A.6	
102256	A.5	
102257	A.5	
102258	A.5	
102261	P.3	
102261	R.4	
102262	P.3	
102262	R.4	
102384	A.5	
106045	M.6	
107308	L.2	
126806	A.2	
126812	A.2	
126812	Q.2	
126824	A.2	
126831	A.2	
126833	A.2	
126834	A.2	
126837	A.2	
126848	A.2	
126853	F.2	
126854	F.2	
126854	G.5	
126855	F.2	
126857	G.5	
126858	F.2	
126858	G.5	
126861	F.2	
126867	F.2	
126868	F.2	
126876	A.6	
126884	A.6	
126897	A.3	
126898	A.3	
126900	A.4	
126902	A.4	
126903	A.4	
126905	A.4	
126908	A.4	
126911	A.4	
126913	A.4	
126914	A.4	
126915	A.4	
126916	B.2	
126919	B.2	
126920	B.2	
126921	B.2	
126922	B.2	
126926	B.2	
126929	B.2	
126940	B.2	
126941	B.2	
126942	B.2	
126965	D.2	
126966	D.2	
126968	D.3	
126973	D.3	
126974	D.3	
126975	D.3	
126978	D.3	
126979	D.2	
126999	B.2	
127001	E.4	
127009	D.3	
127018	B.3	
127019	B.3	
127041	M.2	
127057	M.2	
127059	A.2	
127062	M.2	
127063	A.6	
127151	A.2	
127153	Q.2	
127163	D.2	
127648	A.6	
127649	A.6	
127657	A.4	
128355	J.2	
128355	R.2	
128742	C.2	
128813	M.2	
128836	E.4	
128851	B.3	
129162	C.2	
129247	A.4	
129248	A.4	
129754	B.2	
129786	D.3	
129825	B.2	
129925	A.2	
130136	A.6	
130148	A.8	
130148	P.2	
130180	A.6	
130288	A.6	
130289	A.6	
130346	B.3	
130420	A.6	
130453	B.3	
130462	B.2	
130463	B.2	
131904	P.2	
131904	R.4	
131957	K.5	
132481	B.2	
133602	L.2	
133656	K.5	
134995	K.4	
135004	L.2	
135379	R.3	
135671	K.5	
135804	R.4	
135886	A.2	
135892	A.6	
135893	A.2	
135894	A.2	
135904	A.2	
135905	A.2	
135910	B.2	
135911	A.2	
135916	A.2	
135917	A.2	
135918	A.6	
135919	C.2	
135920	A.6	
135921	A.2	
135975	A.2	
135976	A.2	
136004	B.2	
136007	Q.2	
136016	Q.2	
136019	A.3	
136020	A.3	
136021	A.3	
136022	A.3	
136023	A.4	
136034	A.2	
136035	A.2	
136037	L.2	
136058	A.2	
136153	A.2	
136156	A.2	
136157	A.2	
136161	A.4	
136167	B.2	
136180	F.2	
136184	E.4	
136185	A.6	
136186	A.6	
136187	A.6	
136188	A.7	
136189	A.7	
136190	C.2	
136193	C.2	
136194	M.2	
136199	M.2	
136201	L.2	
136204	B.3	
136205	B.3	
136209	C.3	
136252	C.2	
136253	C.2	
136256	A.2	
136257	A.2	
136258	A.2	
136259	E.4	
136260	E.4	
136261	E.4	
136262	E.4	
136263	E.4	
136267	M.2	
136268	Q.4	
136269	L.2	
136271	L.2	
136272	L.4	
136274	C.3	
136275	C.3	
136276	C.3	
136277	C.3	
136278	C.3	
136279	M.2	
136280	M.2	
136281	F.2	
136290	L.3	
136291	M.2	
136292	L.2	

NUMERICAL INDEX—*continued*

Part Number	Page	PMG Number	Part Number	Page	PMG Number	Part Number	Page	PMG Number	Part Number	Page	PMG Number
136298	D.3		138616	K.6		168160	K.3		181305	K.7	
136302	L.3		138617	K.6		168209	H.2		183528	K.5	
136303	L.3		138618	K.6		168210	H.4		185246	B.2	
136307	L.2		138621	K.6		168221	H.5		185251	B.2	
136308	L.3		138632	K.4		168222	H.5		186111	K.5	
136309	L.3		138663	K.3		168223	H.4		186485	B.2	
136312	L.3		138666	K.6		168243	G.2		186617	L.3	
136314	M.2		138667	K.6		168249	G.2		250379	M.6	
136315	L.3		139016	K.3		168250	G.2		250380	M.6	
136316	L.3		139031	C.2		168374	F.5		250381	Q.4	
136337	L.2		139059	M.2		168374	R.2		250382	Q.4	
136338	L.2		139084	L.2		168387	F.5		250383	M.6	
136340	A.8		139085	Q.3		168388	R.2		250384	M.6	
136340	R.4		139089	L.4		168390	J.2		250385	M.6	
136347	P.2		139100	L.4		168423	F.6		250464	Q.4	
136348	P.2		139105	A.4		168424	J.2		250465	Q.4	
136377	A.2		139106	A.6		168426	R.2		260631	Q.3	
136466	D.2		139108	A.6		168428	R.2		260744	Q.4	
136467	D.2		139256	K.7		168429	R.2		260746	M.3	
136468	D.2		139513	F.2		168431	F.6		260746	Q.3	
136469	Q.2		139514	F.2		168433	R.2		260746	Q.4	
136470	Q.2		139515	M.2		168436	R.2		270414	Q.4	
136478	D.2		139559	P.2		168437	R.2		270649	Q.3	
136478	Q.2		139603	P.2		168438	R.2		271188	M.4	
136547	A.2		139604	P.2		168439	R.2		271193	M.4	
136605	D.2		139605	P.2		168462	R.2		271201	M.5	
136624	Q.2		139606	P.2		168463	R.2		271202	M.5	
136676	M.2		139698	P.2		168483	R.2		271218	M.4	
136677	Q.4		139718	L.2		168489	K.2		271237	M.5	
136678	M.2		139731	B.2		168531	G.4		271238	M.5	
136679	Q.4		139776	A.2		168553	F.4		271239	M.5	
136683	D.3		139778	A.2		168632	F.4		271241	M.4	
136687	K.3		139779	D.2		168634	H.2		271242	M.4	
136687	Q.3		139797	Q.2		168706	G.2		271243	M.4	
136691	K.5		139940	B.3		168722	K.8		271244	M.4	
136711	M.2		139941	B.3		168722	R.2		271253	M.4	
136713	D.3		139942	B.3		168726	G.2		271254	M.4	
136715	K.4		162437	G.3		168727	G.2		271255	M.4	
136810	L.4		162438	G.3		168728	G.2		271256	M.4	
136811	C.3		162458	G.3		170082	F.6		271257	M.4	
136812	C.3		162515	R.4		170082	R.2		271257	M.5	
136813	C.3		162677	G.4		180064	P.2		271258	M.5	
136852	L.3		163138	G.3		180079	C.2		271259	M.5	
136853	L.3		163405	K.3		180095	A.2		271260	M.5	
136856	Q.2		163422	H.4		180102	C.2		271261	K.3	
136864	M.2		164119	K.3		180115	A.2		271262	M.4	
136865	B.3		164711	G.3		180116	A.2		271267	Q.3	
136865	K.5		168008	G.2		180117	A.2		271268	Q.3	
136865	K.6		168010	G.2		180124	A.2		271268	Q.4	
136884	K.7		168020	F.4		180260	M.5		271269	M.6	
136901	L.2		168021	H.2		180264	A.6		271270	M.6	
136902	L.2		168023	H.2		180265	A.6		271273	Q.3	
138538	K.3		168120	G.4		180322	A.6		271273	Q.4	
138540	K.3		168122	F.2		180954	N.2		271274	Q.3	
138541	K.3		168124	H.2		181231	A.7		271275	M.4	

NUMERICAL INDEX—*continued*

Part Number	Page	PMG Number
271276	M.3	
300003	A.6	
300004	A.7	
300005	A.7	
300209	L.3	
300210	L.3	
300211	L.3	
300212	L.3	
300213	L.3	
300215	L.3	
300216	E.4	
300217	B.3	
300218	B.3	
300220	K.4	
300221	Q.3	
300222	K.4	
300223	Q.3	
300246	Q.3	
300247	Q.3	
300248	K.4	
300249	K.4	
300250	K.4	
300251	Q.3	
300252	Q.3	
300255	K.3	
300404	K.4	
300405	K.4	
300534	M.5	
300535	M.5	
300597	M.5	
300602	K.6	
300603	K.6	
300603	Q.3	
300607	K.6	
300825	R.2	
300841	G.3	
300842	G.3	
300845	G.3	
300848	G.3	
300850	G.3	
300852	G.3	
300853	G.3	
300875	Q.3	
300933	A.4	
300936	A.4	
300936	A.7	
300937	A.4	
300937	A.7	
300938	A.4	
300938	A.7	
300939	A.4	
300940	A.7	
300942	A.7	
300943	A.7	
300944	A.7	
300954	A.7	
300989	E.4	
301016	K.7	
301017	K.6	
301018	K.6	
301019	K.6	
301019	K.7	
301021	R.4	
301156	F.7	
301171	K.4	
301172	K.4	
301173	K.4	
301174	K.4	
301441	K.6	
301442	K.6	
301470	F.7	
301471	F.7	
301503	R.4	
301504	R.4	
301505	R.4	
301581	K.2	
301581	K.8	
301603	F.2	
301605	K.2	
301649	F.7	
301650	F.7	
500000	M.2	
500005	P.2	
500006	P.2	
500007	P.2	
500008	C.2	
500013	P.3	
500017	P.2	
500018	P.2	
500018	P.3	
500023	P.2	
500024	P.3	
500025	P.3	
500027	P.3	
500028	P.2	
500030	P.3	
500049	L.3	
500050	L.3	
500051	L.3	
500060	A.8	
500060	P.2	
500069	L.2	
500078	P.2	
500078	P.3	
500080	P.3	
500081	P.3	
500091	B.3	
500099	B.3	
500109	A.3	
500116	Q.2	
500119	L.2	
500120	L.2	
500121	L.2	
500122	L.2	
500123	L.2	
500124	L.2	
500125	L.2	
500126	K.5	
500127	K.5	
500128	K.5	
500129	K.5	
500130	K.5	
500131	K.5	
500133	K.5	
500134	P.2	
500135	C.3	
500137	C.3	
500138	C.3	
500139	C.3	
500140	C.3	
500143	L.2	
500144	P.3	
500144	R.3	
500145	P.3	
500145	R.3	
500146	P.3	
500146	R.3	
500148	P.3	
500148	R.3	
500149	P.3	
500149	R.3	
500150	P.3	
500150	R.3	
500151	P.3	
500151	R.3	
500152	P.3	
500152	R.3	
500153	P.3	
500153	R.3	
500154	K.4	
500154	P.3	
500164	P.2	
500165	P.2	
500166	P.2	
500167	P.2	
500183	R.4	
500195	A.3	
500195	A.4	
500196	A.3	
500196	A.4	
500197	A.3	
500197	A.4	
500198	A.3	
500198	A.4	
500203	B.2	
500203	Q.2	
500240	R.3	
500241	R.3	
500308	A.8	
500320	K.6	
500328	A.3	
500328	A.4	
500333	L.3	
500341	R.3	
500490	P.2	
500491	P.2	
500492	P.2	
500493	L.4	
500494	P.2	
500496	B.2	
500513	C.2	
500521	Q.2	
500523	Q.2	
500526	B.2	
500527	K.4	
500528	Q.3	
500529	K.4	
500533	A.4	
500536	A.7	
500537	A.7	
500538	A.4	
500553	K.4	
500554	P.2	
500554	P.3	
500562	K.6	
500563	K.5	
500567	K.4	
500568	K.3	
500586	A.2	
500589	Q.2	
500596	D.3	
500597	D.3	
500610	D.3	
500611	K.4	
500612	K.4	
500615	K.5	
500616	K.4	
500617	Q.3	
500727	K.3	
500732	K.3	
500733	Q.3	
500782	C.3	
500786	D.3	
500787	Q.2	
500788	R.4	
500789	R.4	
500798	R.4	
500799	K.3	
500800	L.3	
500801	L.3	

NUMERICAL INDEX—*continued*

Part Number	Page	PMG Number	Part Number	Page	PMG Number	Part Number	Page	PMG Number	Part Number	Page	PMG Number
500804	Q.3										
500805	K.5										
500807	L.3										
500808	L.3										
500809	R.4										
500810	R.4										
500811	R.4										
500812	R.4										
500815	K.3										
500816	K.3										
500816	Q.3										
500822	A.4										
500823	A.4										
500824	K.5										
500829	R.4										
500845	A.2										
500846	A.2										
500848	K.5										
500849	K.5										
500850	K.5										
500851	K.3										
500852	K.5										
500853	K.5										
500854	K.5										
500855	K.5										
500856	K.5										
500864	K.3										
500865	K.3										
500866	K.3										
500866	Q.3										
500871	L.3										
500929	N.2										

SECTION A

CHASSIS FRAME

FRONT SUSPENSION ASSEMBLY

FRONT HYDRAULIC DAMPERS

REAR AXLE

REAR SPRINGS

PROPELLER SHAFT

REAR HYDRAULIC DAMPERS

WHEELS

DESCRIPTION	No. off per Car	Commencing Chassis No. TD0251			Commencing Chassis No.		Commencing Chassis No.	REMARKS
		Part No.	Illus. No.	Part No.		Part No.		
CHASSIS FRAME								
Chassis frame complete	1	135886	A1					
Extension—front R/H—frame	1	135893	A2					
End block—extension	1	126831						
Extension—front L/H—frame	1	135894	A3					
End block—extension	1	126831						
Anchor—stay tube	2	126837	A6					
Bracket—steering rack—R/H	1	135975						
Bracket—steering rack—L/H	1	135976						
Bracket—clutch and brake pedal assembly	1	139776		500586	22251			
Bracket—brake pedal return spring	1	126812						
Bracket—frame stiffener—R/H	1	135916	A7					
Bracket—frame stiffener—L/H	1	135917	A8					
Support plate—hand brake pedal bracket	1	126834						
Pivot—brake and clutch pedal shaft	1	136547						
Support bracket—Lockheed hose (3-way piece)	1	139778						
Bracket—engine mounting rear	2	126806	A9					
Bracket—propeller shaft tunnel	2	136058	A10					
Bracket—exhaust pipe	1	136035	A11					
Bracket—exhaust pipe	1	136034	A12					
Bracket—centre—body mounting	1	135921	A13					
Bracket—front—rear spring—R/H	1	135904	A14					
Bracket—front—rear spring—L/H	1	135905	A15					
Bracket—rear—body mounting	2	135911	A16					
Bracket—rear—rear spring	2	126824	A17					
Bush—rear spring bracket	2	126833						
Stop—clutch and brake pedals	1	127151						
Mounting bracket—rear wing—R/H	1	136257	A18					
Mounting bracket—rear wing—L/H	1	136258	A19					
Mounting bracket—rear valance	2	136256	A20					
Mounting bracket—body—R/H	1			500845	20749			
Mounting bracket—body—L/H	1			500846				
Packing—body mounting	2			127059				
Packing piece—body mounting	2			129925				
Bracket—Lockheed hose—rear	1	136377						
Stiffener bracket—R/H	1	136156	A21					
Stiffener bracket—L/H	1	136157	A22					
Stay tube assembly	2	136153	A23					
Fork end	2	126848	A24					
Dash stiffener assembly	1		A25	180095	0351			
Gusset plate—dash stiffener	2		A26	180117				
Gusset plate—top—dash stiffener	2		A27	180124	0351			Fin. at 20748
Attachment plate — R/H — dash stiffener	1			180115	0351			
Attachment plate — L/H — dash stiffener	1			180116				
AMENDMENTS								

DESCRIPTION	No. off per Car	Commencing Chassis No. TD0251		Part No.	Commencing Chassis No.	Part No.	Commencing Chassis No.	REMARKS
		Part No.	Illus. No.					
FRONT SUSPENSION								
Steering knuckle—R/H	**1**	**136021**	**A28**	**ATB4206**	**12285**			
Swivel pin—R/H	1	ACG4031	A30					
Link—swivel pin—upper R/H	1	ATB4208	A32					When supplying ATB4208/9 supply also UHN405
Plate—link	1	ACA4010	A34					
Bush—link	1	ACG6005	A35					
Link—swivel pin—lower R/H	1	126897	A36					
Plate—link	1	ACA4010	A34					
Bush—link	1	ACG6005	A35					
Seal—swivel pin	2	ACG4030	A38					
Grease nipple ($\frac{5}{16}$"×90°)—link	2	ACA5122	A39					
Lubricator	2	UHN405						
Steering lever—R/H	**1**	**136019**	**A40**					
Nut—Simmonds thin ½" BSF	1	500109	A42					
Key (Woodruff No. 8)	1	WKN506	A43					
Nut—steering knuckle—R/H	1	FNN412	A44					
Washer—plain	2	ATB4069						
Felt washer—hub	1	53853	A46					Fin. at 6034
Grease retainer—hub	1	100711	A47	ATB4098	6035			
Bearing hub—inner	1	ACF4002	A48					
Bearing hub—outer	1	ACF4000	A49					
Distance piece—hub	1	ACF4003	A50					
Distance washer—hub	1	ACF4001	A51					
Oil seal—hub	1	ACF4004	A52					
Seal	1	500196						Fin. at 6034
Grease-retaining cap	1	500195		ATB4098	6035			
Spring clip	1	500198						
Washer	1	500328						Fin. at 6034
Distance tube	1			500197	4251			
Hub and brake-drum assembly— R/H front (including wheel studs)	1	68913	A53	101897	4251	ATB4129	6035	
Wheel stud	5	68755	A54, E39	ATB4162	4251			Fin. at 12284
Nut—wheel stud	5	ATB4163	E40					
Bolt—brake-plate to stub shaft	4	101892						
Hub and brake-drum assembly— L/H front (including wheel studs)	1			ACF4007	12285			
Wheel stud	5			ATB4097				
Nut—wheel stud	5			ATB4100				
Steering knuckle—L/H	**1**	**136022**	**A29**	**ATB4207**				
Swivel pin—L/H	1	ACG4032	A31					
Link—swivel pin—upper L/H	1	ATB4209	A33					When supplying ATB4208/9 supply also UHN405
Plate—link	1	ACA4010	A34					
Bush—link	1	ACG6005	A35					
Link—swivel pin—lower L/H	1	126898	A37					
Plate—link	1	ACA4010	A34					
Bush—link	1	ACG6005	A35					
Seal—swivel pin	2	ACG4030	A38					
Grease nipple ($\frac{5}{16}$"×90°)—for links	2	ACA5122	A39					
Lubricator	2	UHN405						
Steering lever—L/H	**1**	**136020**	**A41**					
Nut—Simmonds thin ½" BSF	1	500109	A42					
Key (Woodruff No. 8)	1	WKN506	A43					
Nut—steering knuckle—L/H	1	FNN2412	A45					
Washer—plain	2	ATB4069						
Felt washer—hub	1	53853	A46	ATB4098	6035			Fin. at 6034

DESCRIPTION	No. off per Car	Commencing Chassis No. TD0251			Commencing Chassis No.		Commencing Chassis No.	REMARKS
		Part No.	Illus. No.	Part No.		Part No.		
Front Suspension—*continued*								
Grease retainer—hub	1	100711	A47					Fin. at 6034
Bearing—hub—inner	1	ACF4002	A48					
Bearing—hub—outer	1	ACF4000	A49					
Distance piece—hub	1	ACF4003	A50					
Distance washer—hub	1	ACF4001	A51					
Oil seal—hub	1	ACF4004	A52					
Seal	1	500196						Fin. at 6034
Grease-retaining cap	1	500195		ATB4098	6035			
Spring clip	1	500198						
Washer	1	500328						Fin. at 6034
Distance tube	1			500197	4251			
Hub and brake-drum assembly—front (including wheel studs)	1	68913	A53	101897	4251	ATB4129	6035	
Wheel stud	5	68755	A54, E39	ATB4162	4251			Fin. at 12284
Nut—wheel stud	5	ATB4163	E40					
Hub and brake-drum assembly, including wheel studs	1			ACF4007				
Wheel stud	5			ATB4097	12285			
Nut—wheel stud	5			ATB4100				
Bolt—brake to stub shaft	4	101892						
FRONT HYDRAULIC DAMPERS LUVAX GIRLING								
Damper complete—front	**2**	**136023**	**A55**					
Bolt—wishbone to link	2	129247	A56					
Link—distance tube	4	126900	A57					
Thrust washer—link	8	127657	A58					
Seal—link	8	126902	A59					
Support—link seal	8	126903	A60					
Spring coil	2	139105	A61					
Spring pan assembly	2	126905	A62					
Bottom wishbone assembly	4	126908	A63					
Wishbone pivot	2	126911	A64					
Bolt—wishbone to link	2	129248	A65					
Spigot for spring	2	136161	A66					
Check rubber	2	500822	A67					
Distance piece	2	500823						
Bolt	4	AJD6212						
Bush—bottom wishbone	8	126914	A68					
Washer—wishbone	4	126915	A69					
ALTERNATIVE ARMSTRONG SHOCK ABSORBERS								
Front shock absorbers complete	**2**	**500533**						
Valve assembly	2	300939						
Lid	2	300933						
Gasket	2	7H1785						
Screws	16	300936						
Filler plug	2	300937						
Washer—filler plug	2	300938						
Distance tube	2	500538						
Bolt—shock absorber to cross-member	4	AJD6309Z						
Bolt—shock absorber to cross-member	3	AJD6310Z						
Bolt—shock absorber to cross-member	1	AJD6315Z						
Spring washer	8	LWZ206						

DESCRIPTION	No. off per Car	Commencing Chassis No. TD0251 Part No.	Illus. No.	Part No.	Commencing Chassis No.	Part No.	Commencing Chassis No.	REMARKS
REAR AXLE ASSEMBLY, SPRINGS, AND PROPELLER SHAFT (The hypoid axle is of unit construction. Replacements of its component parts must be by selective assembly, fitted according to the special procedure and as detailed in the Workshop Manual.)								
Rear axle complete	**1**	**A2342**		**A2370**				
Axle tube sub-assembly—R/H (including studs, nuts, and grease plug)	**1**	**101862**	**B1**	**102256**				
Stud—cover	10	101856	B2	ATC7461	12285			
Nut—axle cover stud	10	NMS1/3	B3	AFN106/N				
Axle tube sub-assembly—L/H	**1**	**101866**	**B7**	**102257**				
Cage—differential	1	101529	B8	102219				
Pinion—differential	2	101524	B11	101989				
Washer—pinion	2	101525	B12					
Pin—pinion	1	101523	B14					
Gear—differential	2	101527	B9	101988	12285			
Washer—gear	2	101528	B10					
Bearing—differential	2	97H659	B17					
Locking bolt—pinion pin	1	101422	B15	ATC7488	12285			
Tab washer—locking bolt	1	ATC7489	B16					
Joint—axle tubes	1	101538	B4					
Distance collar—bearing—·495"	2	101952	B18					Available in 12 different sizes from ·495 to ·506", rising in stages of ·001"
Distance collar—bearing—·496"	2	101952						
Distance collar—bearing—·497"	2	101952						
Distance collar—bearing—·498"	2	101952						
Distance collar—bearing—·499"	2	101952						
Distance collar—bearing—·500"	2	101952						
Distance collar—bearing—·501"	2	101952						
Distance collar—bearing—·502"	2	101952						
Distance collar—bearing—·503"	2	101952						
Distance collar—bearing—·504"	2	101952						
Distance collar—bearing—·505"	2	101952						
Distance collar—bearing—·506"	2	101952						
Grease plug—bearing housing	2	101574		ATC7464				
Oil filler plug	1	101777	B6	ADP116				
Drain plug	1	958Z	B5	ADP104	12285			
Crown wheel and pinion	**1 pr.**	**101902**	**B19**	**102258**				
Bolt—crown wheel	8	101985	B20	ATA7043				
Locking tab—crown wheel bolt	4	101535	B21	102384				
Bearing and spacer assembly	1 set	101558	B23					
Distance washer—pinion—rear—·117"	1	101874	B22					Available in 12 different sizes from ·117 to ·128", rising in stages of ·001"
Distance washer—pinion—rear—·118"	1	101874						
Distance washer—pinion—rear—·119"	1	101874						
Distance washer—pinion—rear—·120"	1	101874						
Distance washer—pinion—rear—·121"	1	101874						
Distance washer—pinion—rear—·122"	1	101874						
Distance washer—pinion—rear—·123"	1	101874						
Distance washer—pinion—rear—·124"	1	101874						
Distance washer—pinion—rear—·125"	1	101874						
Distance washer—pinion—rear—·126"	1	101874						
Distance washer—pinion—rear—·127"	1	101874						
Distance washer—pinion—rear—·128"	1	101874						
Oil seal—pinion—front	1	ATA7047	B24					
Nut—pinion	1	80496	B26	ATC7482	12285			
Washer—nut	1	80497	B27	ATC7483				

DESCRIPTION	No. off per Car	Commencing Chassis No. TD0251 Part No.	Illus. No.	Part No.	Commencing Chassis No.	Part No.	Commencing Chassis No.	REMARKS
Rear Axle Assembly, Springs, and Propeller Shaft—*continued*								
Flange—universal joint	1	ATC7481	B25					
Hub and brake-drum assembly (including wheel studs)	2		B38	101898	4251			
Wheel stud	10	ATB4162	B39, E39					Fin. at 12284
Nut—wheel stud	10	ATB4163	B40, E40					
Brake-drum and hub assembly (including wheel studs)	2			102224				
Wheel studs	10			ATB4097	12285			
Nut—wheel studs	10			ATB4100				
Rear axle shaft (with nut)	2	101872	B28	102231				
Distance washer—hub bearing	2	101548	B32					
Bearing—rear hub	2	97H656	B31					
Collar—oil seal	2	101551	B34					
Washer—axle shaft nut	2	ATC7510	B30					
Nut—axle shaft	2	101791	B29	ATC7511	12285			
Support—brake-plate	2	101552	B35					
Oil seal—hub	2	101550	B33					
Nut	8	AJD8136Z	B37	LNN206	12285			
Check strap assembly—rear axle	2	180322	A139					
Check strap	2	135918	A140	126884	12285			
Buffer—check strap	2	136187	A141	95608				
Rivet	8	180264						
Rebound rubber—axle	2	135920	A142	95609	12285			
Rear springs complete	2	139106						
Main leaf complete with bush	2	300003	A70					
Bush—Silentbloc	2	83987	A71					
Second leaf	2	139108	A72					
Third leaf	2	NSP	A73					
Fourth leaf complete with clips	2	NSP	A74					
Leaf clips	4	130420	A75					
Rivet	4	180265						
Distance tube	4	127648	A76					
Bolt (¼" BSF)	4	127649	A82					
Fifth leaf	2	NSP	A77					
Sixth leaf	2	NSP	A78					
Seventh leaf	2	NSP	A79					
Rubber pad	24	ACG5232	A80					
Rubber—spring clip	8	127063	A81					
Locating bolt	2	130180	A83					
Distance piece—locating bolt	2	ACA5000						
Clip—rear spring	4	130288	A84					
Bracket—R/H (damper to rear spring)	1	136185	A86					
Bracket—L/H (damper to rear spring)	1	136186	A85					
Pin—rear spring front end	2	126876	A87					
Washer—Silentbloc	4	84391	A88					
Seating pad—rear spring	4	130136	A89					
Locating plate—rear spring	4	130289	A90					
Shackle plate	4	99693	A91					
Shackle pin	4	99565	A92					
Bush	8	ACA5242	A93					
Propeller shaft assembly (R)	1	135892						
Flange yoke assembly	1	7H3865	B51					
Flange yoke	2	7H3863	B50					
Journal assembly—less greasers	2	8G3000	B52					

DESCRIPTION	No. off per Car	Commencing Chassis No. TD0251		Part No.	Commencing Chassis No.	Part No.	Commencing Chassis No.	REMARKS
		Part No.	Illus. No.					
Rear Axle Assembly, Springs, and Propeller Shaft—*continued*								
Needle bearing assembly	8	7H3874	B55					
Snap ring	8	7H3877	B56					
Dust cap	1	7H3878	B58					
Steel washer	1	7H3879	B59					
Cork washer	1	7H3880	B60					
Grease nipple	2	2A5393	B57					
Tubular shaft assembly	1	7H3893	B49					
Bolt—propeller shaft	8	AJD6209						
Turret locknut ($\frac{5}{16}$" BSF) (Philidas)	8	AJD8135Z						
Grease nipple ($\frac{1}{8}$" gas)	1	181231	B61					
AMENDMENTS								
REAR HYDRAULIC DAMPERS LUVAX GIRLING								
Damper complete—R/H	**1**	**136188**	**A94**					
Pin—connecting link	1	300005						
Connecting link	1	300004						
Bearing rubber	1	AJJ402						
Damper complete—L/H	**1**	**136189**	**A95**					
Pin—connecting link	1	300005						
Connecting link	1	300004						
Bearing rubber	1	AJJ402						
ALTERNATIVE ARMSTRONG SHOCK ABSORBERS								
Rear shock absorber—R/H—complete with arm and link	**1**	**500536**						
Rear shock absorber—R/H—with arm, less link	1	300943						
Link	1	300954						
Valve assembly	1	300942						
Lid	1	300940						
Gasket	1	7H1788						
Screws	6	300936						
Filler plug	1	300937						
Washer—filler plug	1	300938						
Rear shock absorber—L/H—complete with arm and link	**1**	**500537**						
Rear shock absorber—L/H—with arm, less link	1	300944						
Link	1	300954						
Valve assembly	1	300942						
Lid	1	300940						
Gasket	1	7H1788						
Screws	6	300936						
Filler plug	1	300937						
Washer—filler plug	1	300938						

DESCRIPTION	No. off per Car	Commencing Chassis No. TD0251		Part No.	Commencing Chassis No.	Part No.	Commencing Chassis No.	REMARKS
		Part No.	Illus. No.					
WHEELS								
Wheel (ventilated disc) (4·00 × 15)	5	130148						Fin. at 0500
Wheel (drilled disc) (4·00 × 15)	5	500060						Com. at 0501
Hub cap assembly	5	500308						
Medallion	5	136340						
Spring washer	5	BDH593						
AMENDMENTS								

SECTION B

STEERING GEAR

STEERING COLUMN

STEERING WHEEL

DESCRIPTION	No. off per Car	Commencing Chassis No. TD0251 Part No.	Illus. No.	Part No.	Commencing Chassis No.	Part No.	Commencing Chassis No.	REMARKS
STEERING GEAR								
Steering pinion and tie-rods assembly	1	**136167**		**500526**	**11111**			
Rack housing—steering	1	126916	C1					
Rack—steering	1	MG899/101	C2	500496	11111			
Pinion—steering	1	135910	C3					
Thrust washer—top—pinion	1	126919	C4					
Shim (·005" thick)—tail bearing	A/R	126920	C5					
Shim (·007" thick)—tail bearing	A/R	126921	C6					
Thrust washer—bottom pinion	1	126926	C7					
Seal—pinion	1	126922	C8					
Tail bearing—pinion	1	139731	C9					
Flange—pinion	1	126999	C10					
Circlip—pinion	1	129825						
Damper pad—rack	1	ACA5244	C11					
Housing—damper pad	1	ACA5245	C12					
Spring—damper pad	1	ACA5248	C13					
Shim (·003")—damper pad housing	A/R	ACA5249	C14					
Shim (·020")—damper pad housing	A/R	132481	C15					
Tie-rod	2	126929	C16					
Locknut—tie-rod	2	ACA5250	C17					
Ball housing—male	2	101772	C18	ACA6031	11111			
Ball housing—female	2	ACA5304	C19					
Ball seat	2	ACA5246	C20					
Shim—ball seat adjuster (·003")	A/R	ACA5301	C21					
Shim—ball seat adjuster (·005")	A/R	ACA5302	C22					
Ball socket assembly—outer	**2**	**ACA6005**	**C23**					
Boot ring clip	2			186485	25976			
Boot	2			185246				
Boot clip	2			7H3565				
Washer—plain	2			185251				
Cap—inner—grease retaining	2	126941	C24					
Cap—outer—grease retaining	2	126940	C25					
Pressure ring for caps	2	126942	C26					
Lock washer—ball housing—inner	2	ACA5247	C27					
Seal—ball joint	2	ADG1668	C28					
Clip (large)	2	ADG1682	C29					
Clip (small)	2	ADG1681	C30					
Grease nipple ($\frac{5}{16}$" straight)—rack housing	1	X19460	C31					
Grease nipple ($\frac{5}{16}$"×90°)—steering arm	2	ACA5122	C32					
Adaptor—grease nipple	1	500203						
STEERING COLUMN ASSEMBLY								
Steering column assembly	1	**136004**						
Adjustable top end	1	47323	C33					
Key—steering wheel	1	19835	C34					
Key—connector	1	47330	C35					
Spring cover	1	130463	C36					
Cover cup	1	130462	C37					
Clamp—steering column	1	47327	C38					
Bolt—clamp	1	47324	C39					
Nut—clamp bolt	1	17H6156	C40					
Washer—clamp bolt	1	47325	C41					
Plate—bottom bush	1	129754	C42					
Bush—top	1	47318	C43					
Bush—bottom	1	27H6148	C44					

DESCRIPTION	No. off per Car	Commencing Chassis No. TD0251		Part No.	Commencing Chassis No.	Part No.	Commencing Chassis No.	REMARKS
		Part No.	Illus. No.					
Steering Column Assembly—*continued*								
Inner column (welded)—complete	1	300217	C45					
Outer column	1	300218	C46					
Bolt—column flange to box flange	3	127018	C47					
Washer—column flange bolt	3	127019	C48					
Rubber bearing—column	6	128851	C49					
Support bracket—top	1	136204	C50					
Clamp—steering column	1	80583	C51					
Distance tube—column adjustment	1	500099	C52					
Steering wheel	**1**	**136205**	**C53**					
Nut—steering wheel	1	130453	C54					
Distance piece—steering column clamp	1	130346	C55					
Decorative horn-push and steering column control head assembly	1	136865	C56					
Clip—steering column steady	1	139940	C57					
Distance tube—long	1	139941	C58					
Distance tube—short	1	139942	C59					
AMENDMENTS								

DESCRIPTION	No. off per Car	Commencing Chassis No.		Part No.	Commencing Chassis No.	Part No.	Commencing Chassis No.	REMARKS
		Part No.	Illus. No.					
AMENDMENTS								

SECTION C

RADIATOR

EXHAUST SYSTEM

PETROL TANK

PETROL PIPES

DESCRIPTION	No. off per Car	Commencing Chassis No. TD0251		Part No.	Commencing Chassis No.	Part No.	Commencing Chassis No.	REMARKS
		Part No.	Illus. No.					
RADIATOR AND CONNECTIONS								
Radiator complete	1	NSP						
Radiator case (with medallion, grille, and false nose)	1	ARG920	A96					
Radiator false nose	1	AJJ119	A97					
Medallion—M.G.—radiator	1	AJJ118	A98					
Radiator grille	1	AJJ142	A99					
Rest rubber—bonnet	1	2470						
Support—bonnet hinge rod—outer	1	81810						
Support—bonnet hinge rod—inner	1	81811						
Radiator film block complete with tanks	1	MG866/1	A100					
Union—radiator thermometer	1	27H2						
Fibre washer	1	ARJ539						
Cap—fibre washer	1	AJJ82						
Drain tap	1	AJJ248	A101					
Fibre washer—drain tap	1	ARJ539						
Bracket—radiator stay rod	2	AJJ1413						
Bracket—radiator—headlamp mountings	2	AJJ144						
Tie bracket—headlamp mounting	1	AJJ145						
Ferrule for headlamp bracket	2	81728						
Filler cap—radiator	1	AJJ246	A102					
Ring—rubber—filler cap	1	AJJ247	A103					
Packing washer—radiator mounting	4	50938	A104					
Support member—radiator	1	135919	A105					
Stay tube—radiator—R/H	1	136252	A106					
Stay tube—radiator—L/H	1	136253	A107					
Yoke end—stay tube	2	1765	A108					
Hose—bottom—radiator	1	95141	A109					
Hose—top—radiator	1	500008	A110					
Clip—top hose	1	95618						
Clip—bottom hose	2	95621	A111					
Clip—top hose	1	H6001	A112					
Drain pipe	1	129162	A113					
Extension—rubber—to drain pipe	1	180079						
AMENDMENTS								
EXHAUST SYSTEM								
Exhaust system assembly	1	500513	A114					
Front pipe	1	136190	A115					
Silencer	1	82620						
Rear pipe	1	139031	A116					
Gasket—exhaust pipe flange	1	52725	A117					
Bracket—front support	1	128742	A118					
Support—tail pipe	2	136193	A119					
Distance piece—front support bracket	1	180102						
AMENDMENTS								

DESCRIPTION	No. off per Car	Commencing Chassis No. TD0251		Part No.	Commencing Chassis No.	Part No.	Commencing Chassis No.	REMARKS
		Part No.	Illus. No.					
PETROL TANK AND PIPES								
Petrol tank complete	1	136811	A120					
Drain plug—petrol tank	1	AJJ55	A121					
Main feed adaptor	1	AJJ151	A122					
Adaptor—drain and feed	2	99545						
Nut—shouldered	4	99667						
Washer—drain plug and main feed	2	ARJ539	A123					
Filler cap (Westwood) complete	1	500135	A124					
Trigger cap	1	500137	A125					
Cork washer	1	500138						
Cotter pins	2	500139						
Tank neck	1	500140						
End cover—petrol tank—R/H	1	136812	A127					
End cover—petrol tank—L/H	1	136813	A126					
Special bolt—tank end cover	4	81851	A128					
Pipe (between carburetters)	1	95276	A129	500782	17356			
Pipe (tank to pump) complete with washer and union washer	1	95535	A130					
Mounting bracket	2	136276	A131					
Rubber for mounting bracket	1	136277	A132					
Adaptor—petrol pipe	1	AUC1832						
Warning light unit Y70382	1	136209						
Car fastener clip ($\frac{5}{16}$")—pipe to side-member	6	95100						
Strap—petrol tank	2	136274	A133					
Packing—tank end cover	2	82096						
Packing—tank strap	2	136278	A134					
Rubber packing—tank to frame	2	136275	A135					
Pipe—pump to carburetters	1	54348	A136					

AMENDMENTS

DESCRIPTION	No. off per Car	Commencing Chassis No.		Part No.	Commencing Chassis No.	Part No.	Commencing Chassis No.	REMARKS
		Part No.	Illus. No.					
AMENDMENTS								

SECTION D

BRAKE PEDAL

CLUTCH PEDAL

CONTROLS

ACCELERATOR PEDAL

DESCRIPTION	No. off per Car	Commencing Chassis No. TD0251		Part No.	Commencing Chassis No.	Part No.	Commencing Chassis No.	REMARKS
		Part No.	Illus. No.					
BRAKE PEDAL								
Brake pedal and bush	1	136466	D1					
Pad—rubber—brake pedal	1	ACA5359	D2					
Bush—brake pedal	1	X24396	H9					
Pad—brake pedal	1	X15670	D3, H3					
Return spring—brake pedal	1	127163	D4					
Pin—brake pedal	1	126979	D5					
Bolt—pad—brake pedal	1	JA5052	H4					
Nut—pad bolt	1	CA1126	H5					
Spring washer—pad bolt	1	CA1283						
Fork end—master cylinder	1	139779	D6					
Spacing washer (between pedals)	1	136478	H8					
Packing—brake and clutch pedals	1	136605						
AMENDMENTS								
CLUTCH PEDAL								
Clutch pedal and bush	1	136468	H1					
Bush—clutch pedal	1	X24396	H9					
Pad—rubber—clutch pedal	1	ACA5359	H2					
Pad—clutch pedal	1	X15670	H3, D3					
Bolt—pad—clutch pedal	1	JA5052	H4					
Nut—pad bolt	1	CA1126	H5					
Spring washer—pad bolt	1	CA1283						
Shaft—clutch and brake pedals	1	136467	H6					
Seager circlip	2	NMS94/25	H7					
Cover-plate—pedal box—L/H side	1	126966						
Seal—side cover-plate	1	126965						
Fume excluder—pedal box	1	82200						
Retainer—fume excluder	1	82201						
AMENDMENTS								

DESCRIPTION	No. off per Car	Commencing Chassis No. TD0251		Part No.	Commencing Chassis No.	Part No.	Commencing Chassis No.	REMARKS
		Part No.	Illus. No.					
CONTROLS								
Clutch cable assembly	1	126968	H10					Fin. at 22250
Clutch rod assembly	1			500786	22251			
Nut—clutch adjuster	1	126973	H11					
Pin—clutch adjuster	1	126974	H12					
Connecting rod—clutch	1	126975	H13					
Yoke pin—rod	1	1781	H14	500597	22251			
Spring—clutch return	1	129786	H15					
Pin—clutch lever	1	126978	H16					
Pin—clutch pedal	1	126978	H16					
Starter control	1	500610	L11					
Bracket—control	1	136683	L12					
Mixture control	1	136713	L13					
Stop—clutch pedal	1			500596	22251			
AMENDMENTS								
ACCELERATOR PEDAL								
Accelerator pedal assembly	1	136298	L14					
Accelerator pedal roller	1	5267	L15					
Pin—pedal roller	1	5270	L16					
Packing—pedal	2	127009	L17					
Control rod—accelerator	1	82572	L18					
Return spring—accelerator	1	53682	L19					
Pin—carburetter lever	1	50638						
Bracket — accelerator spring — on starter bolt	1	X17224						
AMENDMENTS								

DESCRIPTION	No. off per Car	Commencing Chassis No.		Part No.	Commencing Chassis No.	Part No.	Commencing Chassis No.	REMARKS
		Part No.	Illus. No.					
AMENDMENTS								

SECTION E

HYDRAULIC BRAKES

MECHANICAL BRAKES

DESCRIPTION	No. off per Car	Commencing Chassis No. TD0251 Part No.	Illus. No.	Part No.	Commencing Chassis No.	Part No.	Commencing Chassis No.	REMARKS
BRAKE GEAR (LOCKHEED HYDRAULIC)								
Master cylinder and tank assembly	**1**	**17H7307**	**D7**					
Cylinder and tank (bare)	1	7H7934						
Drain plug	1	7H7435	D8					
Gasket—drain plug	1	7H7436	D9					
Valve assembly	1	39731	D10, D12					
Washer—valve	1	7H7489	D12					
Cup—valve	1	7H7022	D11					
Valve body	1	7H7488	D10					
Spring (with retainer)—piston return	1	7H7926	D13					
Retainer	1	7H7487						
Cup—piston	1	7H7485	D14					
Washer—piston	1	7H7484	D49					
Piston—master cylinder	1	7H7925	D15					
Cup—piston secondary	1	7H7490	D16					
Stop—piston	1	7H7025	D17					
Circlip—stop	1	7H7402	D18					
Boot—master cylinder	1	7H7016	D19					
Push-rod—master cylinder	1	27H7143	D20					
Filler plug assembly	1	17H7458	D21					
Gasket—filler plug	1	17H7091	D22					
Adaptor—master cylinder	1	68683	D23					
Gasket—master cylinder	1	3H2287	D24					
Hose assembly	**3**	**68680**	**D25**					**N.A. Fin. at 28950**
Stop light switch	1	3H1894						
Locknut—hose	3	2K8686	D29					
Gasket—hose	3	3H2287	D24					
Lock washer—hose	3	AJD7611	D28					
Four-way piece	1	68651	D26					
Three-way piece	2	27H7165	D27					
AMENDMENTS								
BRAKE PIPES								
Pipe ($\frac{3}{16}$" o/d × 25" long) with 2 tube nuts (master cylinder to 4-way)	1	AJD50	D30					
Pipe ($\frac{3}{16}$" o/d × 46" long) with 2 tube nuts (4-way to 3-way)	1	AJD92	D31					
Pipe ($\frac{3}{16}$" o/d × 23" long) with 2 tube nuts (front 3-way to R/H front hose)	1	AJD46	D32					
Pipe ($\frac{3}{16}$" o/d × 10" long) with 2 tube nuts (front 3-way to L/H front hose)	1	AJD20	D33					
Pipe ($\frac{3}{16}$" o/d × 10" long) with 2 tube nuts (front wheel cylinder to bridge)	2	AJD20	D33					
Pipe ($\frac{3}{16}$" o/d × 51" long) with 2 tube nuts (4-way to rear hose)	1	17H7014	D34					
Pipe ($\frac{3}{16}$" o/d × 42" long) with 2 tube nuts (axle hose bracket to R/H rear)	1	AJD84	D35					

DESCRIPTION	No. off per Car	Commencing Chassis No. TD0251		Part No.	Commencing Chassis No.	Part No.	Commencing Chassis No.	REMARKS
		Part No.	Illus. No.					
Brake Pipes—*continued*								
Pipe ($\frac{3}{16}$" o/d × 31" long) with 2 tube nuts (axle hose bracket to L/H rear)	1	AJD62	D36					
Clip—pipe to side-member	5	95098						
Banjo clips (4 pipe to rear axle, 1 pipe to cross-member)	5	5873						
Clip—pipe to cross-member	1	54516						
AMENDMENTS								
BRAKE GEAR (FRONT AXLE)								
Backplate assembly—R/H	1	**27H7281**	**E1**					
Backplate assembly—L/H	1	**27H7282**	**E2**					
Spring—shoe pull-off	4	27H7159	E3					
Mask—shoe adjuster	4	7H7930	D37					
Adjuster—brake-shoe	4	7H7931	D38					
Nut—cylinder to plate	8	7H7355						
Spring washer	8	7H7368						
Shim	8	68960						
Front brake-shoe (lined)	4	**AJH5193**	**E4**					
Lining—with rivets (kit for 2 wheels)	1 box	79151						
Front wheel cylinder assembly	4	**68593**						
Body with studs and abutment	4	27H7271	D39					
Piston and dust cover assembly	4	27H7270	D40					
Cup—piston	4	7H7923	D41					
Cup filler	4	7H7940	D42					Both parts must be supplied
Spring—cup filler	4	7H7939	D42					
Banjo connection—forward R/H	1	68598	D43					
Bolt—connection	1	7H7847	D45					
Bleeder screw	1	27H7166	D46					
Gasket—banjo bolt—small	1	3H2287	D47					
Gasket—banjo bolt—large	1	3H550	D48					
Banjo connection—forward L/H	1	68597	D44					
Bolt—connection	1	7H7847	D45					
Bleeder screw	1	27H7166	D46					
Gasket—banjo bolt—small	1	3H2287	D47					
Gasket—banjo bolt—large	1	3H550	D48					
Banjo connection—rearward	2	27H7189	E5					
Bolt—connection—rearward	2	27H7167	E6					
Gasket—banjo bolt—small	2	3H2287	E7					
Gasket—banjo bolt—large	2	3H550	E8					
AMENDMENTS								

DESCRIPTION	No. off per Car	Commencing Chassis No. TD0251 Part No.	Illus. No.	Part No.	Commencing Chassis No.	Part No.	Commencing Chassis No.	REMARKS
BRAKE GEAR (REAR AXLE)								
Backplate assembly—R/H	1	**17H7070**	**E9**					
Backplate assembly—L/H	1	**17H7071**	**E10**					
Brake-shoe steady pad	4	300989						
Steady spring	4	7H7927						
Spring—shoe pull-off	2	27H7159	E3					
Spring—shoe tension	2	27H7278	E11					
Mask—shoe adjuster	2	7H7930	E12, D37					
Adjuster—brake-shoe	2	7H7931	E13, D38					
Abutment strip	2	7H7932						
Nut—cylinder to plate	4	7H7355						
Spring washer	4	7H7368						
Shim	4	68960						
Rear brake-shoe (lined)	4	**AJH5193**	**E14**					
Lining—with rivets (kit for 2 wheels)	1 box	79151						
Rear wheel cylinder assembly	2	**27H7394**						
Body and abutment strip	2	7H7942	E15					
Piston and dust cover	2	7H7973	E16					
Piston (hydraulic)	2	7H7928	E17					
Cup—piston	2	7H7923	E18					
Cup filler	2	7H7940	E19					Both parts must be supplied
Spring—cup filler	2	7H7939	E19					
Boot—wheel cylinder	2	68847	E20					
Hand brake lever	2	27H7305	E21					
Pivot pin—hand brake lever	2	7H7929	E22					
Banjo connection	2	27H7189	E5					
Bolt—connection	2	27H7167	E6					
Bleeder screw	2	27H7166						
Gasket—banjo bolt—small	2	3H2287	E7					
Gasket—banjo bolt—large	2	3H550	E8					
AMENDMENTS								
HAND BRAKE ASSEMBLY								
Hand brake assembly	1	**136259**						
Lever assembly	1	136261	E23					
Ratchet assembly	1	300216	E24					
Hand brake pawl	1	136263	E25					
Pawl rod—hand brake	1	136260	E26					
Bolt	2	136262						
Hand grip	1	ACC8958	E27					
Bush for rod	1	ACC8960	E28					
Spring—lever knob	1	ACA5255	E29					
Washer—spring	1	ACC8959	E30					
Knob—pawl rod	1	ACC8956	E31					
Fulcrum pin	1	127001	E32					
Washer—fulcrum pin	1	ACA5240	E33					
Trunnion—hand brake	1	84276	E34					
Twin cable abutment	1	84452	E35					
Adjuster nut—brake cable	2	3463	E36					
Spring for adjuster nut	2	3452						
Cable—hand brake	2	136184	E37					
Clevis pin	2	128836	E38					
AMENDMENTS								

SECTION F

ENGINE MOUNTING

CYLINDER BLOCK

TAPPET INSPECTION COVER

TIMING CHAIN CASE AND TENSIONER

PISTONS

CONNECTING RODS

CRANKSHAFT

CRANKSHAFT MAIN BEARINGS

FLYWHEEL

CAMSHAFT

CAMSHAFT BEARINGS

TIMING CHAIN

CYLINDER HEAD

ROCKER GEAR

PUSH-ROD ASSEMBLY

TAPPETS

MANIFOLDS

DESCRIPTION	No. off per Car	Commencing Engine No. XPAG/TD501 Part No.	Illus. No.	Part No.	Commencing Engine No.	Part No.	Commencing Engine No.	REMARKS
POWER UNIT AND MOUNTING								
Power unit complete (with gear-box, etc.)	1	**XPAG/TD**		**XPAG/TD2**				
Half-engine	1	**SA2449**		**SA2449/1**	**9408**			
Power unit with clutch (less gear-box), electrical equipment, carburetters, and manifolds	1	**SA2445**		**SA2445/1**				
Mounting rubber—engine—front	1	139513	F1					
Engine control link (L/H thread)	1	126855	F2					
Cup—link	2	ACA5379	F3					
Link cup rubber	2	126858	F4					
Adjuster	1	126853	F5					
Engine control bracket	1	136281	F6					
Packing washer	2	126861						
Rear engine bearer bracket	1	136180	G1					
Support rubber	2	139514	G2					
Fork end	1	126867	G3					
Engine rebound rubber	1	126868	G4					
Clevis pin—fork end	1	81199	G5					
Cup—link	1	ACA5379	G6					
Bracket—control link	1	X24190						
Washer for control link bracket	1	PNN105						
Control link (R/H thread)	1	126854						
Link cup rubber	2	126858						
CYLINDER BLOCK, MAIN BEARING CAP, AND TAPPET COVER								
Cylinder block complete (with main bearing caps and pistons)	1	**SA2404/9**	**F7**	**SA2404/10**	**9404**	**AEG5**	**17969**	**Prior to Engine No. 2985 the following parts must also be supplied: X24446, CA1122, LA7155, 31605, X24448, X24447, CA1283**
Cylinder liner—66·5 mm.	4	301603						
Core plug—large	2	X21406						
Core plug—small	6	CA1056						
Core plug—camshaft	1	X15002						
Plug—oil gallery—front	1	X22732						
Plug—oil gallery—rear	1	X15393						
Plug—oil feed hole	5	X22968	F8					
Plug—oil hole—by-pass	1	X20247	F9					
Plug for oil hole by-pass	1			168121	9404			
Main bearing cap—front	1	X22715	J1					
Main bearing cap—centre	1	X22716	J2					
Main bearing cap—rear (with pipe)	1	SA2250	J3					
Pipe—rear cap	1	X22748	J4					
Seal—rear cap	1	X22432	J79					
Dowel cap	3	X22515						
Bearing cap studs	6	LA7104						
Nuts—bearing cap	6	CA1043	J5					
Studs—cylinder head	10	X20014	F13					
Stud—water pump—long	1	JB5968	K2					
Stud—tappet cover	3	X22331	F16					
Dowel—clutch housing	2	X15016	H17					
Stud—water pump	1	X20167	K1					
Oil seal cover	1	X22517	F10					
Gasket—oil seal cover	1	X22518	F11					
Bolt—cover	3	JA5384	F12					
Spring washer bolt	3	CA1282						
Dowel cover	2	X21044						
Water drain tap	1	3H2724	F14					
Washer—drain tap	1	JA5411	F15					
Guide—oil level indicator	1	X24408						
Screw—engine number-plate	1	AEC3202						

DESCRIPTION	No. off per Car	Commencing Engine No. XPAG/TD501 Part No.	Illus. No.	Part No.	Commencing Engine No.	Part No.	Commencing Engine No.	REMARKS
Cylinder Block, Main Bearing Cap, and Tappet Cover—*continued*								
Tappet inspection cover	1	**X24261**	**F17**					
Joint—cover	1	X24130	F18					
Nut—cover stud	3	X22332	F19					
Washer—cover stud	3	CB1729	F20					
Tappet cover	1	X24355						Alternative tappet cover and fittings
Clip for tappet cover	1	X24356						
Bolt	3	JA5384						
Nut	3	CA1254						
Breather pipe	1	X24230	F21					
Bracket—breather pipe	1	X24012	F22					
Bolt—breather pipe bracket	1	X15009	F23					
Nut—breather pipe bracket	1	CA1254	F24					
Washer—breather pipe bracket	1	CA1282						
Clip assembly—breather pipe	1	SA2118						
Clip—breather pipe	1	AEB149	F25					
Bolt—breather pipe clip	1	CA1263	F26					
Nut—clip bolt	1	CA1254	F27					
Spring washer—clip bolt	1	CA1282						
Spring—oil filter—by-pass	1	X22997	F28					Fin. at 14223
Ball—oil-filter—by-pass	1	AMK739	F29					
Guide—ball	1	X22978	F30					
Seat—ball	1	X22759	F31					
Timing chain case and tensioner								
Timing chain case assembly	1	SA2423/2	F32					
T.D.C. indicator for case	1	X24291						
Packing—chain case—top	1	AEG125	F33					
Packing—chain case—bottom	1	AEG126						
Joint—case to plate	1	X24283	F34					
Bolt—long—case to block	2	RA12161	F35					
Bolt—short—case to block	3	X15059	F36					
Spring washer—case bolt	5	X15270						
Tensioner—chain	1	X24137	J6					
Feed block tensioner	1	X24138	J7					
Bolt—feed block	2	X24139	J8					
Spring tensioner	1	X20690	J9					
Bearer plate—front	1	X24180	F37					
Joint—plate to block	1	X22752	F38					
Bolt—plate to case	2	X15012	F39					
Bolt—plate to block	2	X15336	F40					
Spring washer	4	CA1283						
Bracket plate	1	X24181	F41					
Bolt—bracket	4	OA10077	F42					
Nut	4	CA1126	F43					
Spring washer	4	CA1283	F44					
Clip—carburetter overflow pipe	1	AEH550						

AMENDMENTS

DESCRIPTION	No. off per Car	Commencing Engine No. XPAG/TD501 Part No.	Illus. No.	Part No.	Commencing Engine No.	Part No.	Commencing Engine No.	REMARKS
PISTONS, CONNECTING RODS, AND BEARINGS								
Pistons complete (with rings and gudgeon pins)	**4**	**SA2418/2**	**J10**					
Piston ring—compression	8	X24009	J11					
Piston ring—oil control	4	X24010	J12					
Gudgeon pin	4	X24103	J13					
Connecting rod with caps and bolts	**4**	**SA2405**	**J14**					
Bolt—connecting rod cap	8	X24006	J15					
Nut—connecting rod cap bolt	8	AEF131	J16					
Clamp screw—gudgeon pin	4	CA1009	J17					
Spring washer—clamp screw	4	CA1283	J18					
Bearing—big-end—standard	set	AJG4003	J23					
Bearing—big-end—·012″ U/S	set	AJG400312						
Bearing—big-end—·020″ U/S	set	AJG400320						
Bearing—big-end—·030″ U/S	set	AJG400330						
Bearing—big-end—·040″ U/S	set	AJG400340						
CRANKSHAFT MAIN BEARINGS AND FLYWHEEL								
Crankshaft complete (with main bearings)	**1**	**168632**	**J19**					
Bush—crankshaft (clutch spigot)	1	AMK804						
Bearing—standard	set	AJG4002	J20, 21, 22					
Bearing—·012″ O/S	set	AJG400212						
Bearing—·020″ O/S	set	AJG400220						
Bearing—·030″ U/S	set	AJG400230						
Bearing—·040″ U/S	set	AJG400240						
Bearing—·050″ U/S	set	AJG400250						
Flywheel (with starter ring and dowels) (R)	**1**	**SA2252/1**	**H18**	**SA2252/2**	**9408**			
Starter ring	1	X24418		168020				
Dowel—clutch cover	2	AEG3101	H19					
Dowel—crankshaft	2	X22947	H20					
Bolt—flywheel securing	4	TA13079	H61					
Oil thrower—crankshaft	1	X15027	J24					
Chain sprocket	1	X22742	J25					
Key—chain sprocket	1	JA5255	J26					
Pulley (on crankshaft)	1	X24093	J27					
Key—crankshaft pulley	1	JA5255	J28					
Washer	1	X15424	J29					
Nut—crankshaft	1	X15029	J30					
Shim—nut (·125 mm.)	A/R	AEC765	J31					
CAMSHAFT BEARINGS AND TIMING CHAIN								
Camshaft	**1**	**X24084**	**J32**	**168553**	**24116**			When supplying Pt. No. 168553 supply also 168729
Chain sprocket	1	X22744	J33					
Key—chain sprocket	1	JA5255	J34					
Bolt—camshaft	1	X24120	J35					
Washer—chain sprocket	1	X22540	J36					
Lock washer—chain sprocket	1	X22324	J37					
Oil thrower—camshaft	1	X22702	J38					
Circlip—camshaft—rear	1	X22733	J39					
Thrust plate—camshaft	1	X22543	J40					

DESCRIPTION	No. off per Car	Commencing Engine No. XPAG/TD501 Part No.	Illus. No.	Part No.	Commencing Engine No.	Part No.	Commencing Engine No.	REMARKS
Camshaft Bearings and Timing Chain—*continued*								
Bolt—thrust plate	2	X15175						
Spring washer—thrust plate bolt	2	CA1282						
Bearing—camshaft—front	1	X22542	J41					
Bearing—camshaft—rear	1	X22546	J42					
Bearing—camshaft—intermediate	1	SA2224/2	J43					
Screwed dowel—bearing	2	X22547	J44					
Plain dowel—bearing	2	X21044	J45					
Timing chain	1	**X22571**	**J46**					
AMENDMENTS								
CYLINDER HEAD AND VALVE GEAR								
Cylinder head assembly complete with valves and rocker gear	1	**SA2203/7**		**SA2203/10**	**22735**			
Cylinder head (studded) with guides	1	SA2204/7	F45	SA2204/11				
Stud—cover	2	X21027	F46					
Stud—manifold	4	X24063	F47					
Valve guide—inlet	4	X22549	J47					
Valve guide—exhaust	4	X22551	J47					
Push-rod cover tubes	8	X22339						
Core plug—cylinder head	4	CA1614						
Plug—oil hole	1	X15188						
Valve—inlet	4	X22548	J48					
Valve—exhaust	4	X22550	J48	168387	18291			
Spring—valve—inner	8	X24069	J49					
Spring—valve—outer	8	X24068	J50					
Cap—spring—bottom	8	X24090	J51					
Oil deflector valve	8	X24086	J52					
Cap—spring—top	8	X22788	J53					
Packing ring—valve	8	AEK113	J54					
Split cotters—valve spring	16	X20081	J55	168374	9408			
Support bracket—rocker shaft (front, intermediate, and rear)	4	X22914	J56					
Bolt—support bracket (8 mm.)	4	X22915	J57					
Bolt—support bracket (10 mm.)	4	X22755	J58					
Lock plate—support bracket bolts	4	X22916	J59					
Washer—Nos. 1 and 4 brackets	2	X22917	J60					
Washer—Nos. 2 and 3 brackets	2	X22758	J61					
Rocker shaft with plugs	1	SA2232/1 ✓	J62	SA2232/2	9008			
Plug—rocker shaft	2	X15188	J63					
Spacer spring—long—centre	1	X20428	J64					
Spacer spring—medium outer	2/1	X20429	J65					1 off comm. 9008
Spacer spring—short—front and rear	2/4	X19216	J66					4 off comm. 9008
Spring clip—rocker shaft	2	X20048	J67					
Washer—spring clip	2/10	X20128	J68					10 off comm. 9008
Valve rocker with bush (Nos. 4 and 8 valves)	2	SA2213/4	J69	SA2213/5	9008			
Valve rocker with bush (Nos. 1 and 5 valves)	2	SA2214/4	J70	SA2214/5				
Bush for valve rocker (Nos. 4, 8, 1, and 5 valves)	4	X22700	J71	X20036				

DESCRIPTION	No. off per Car	Commencing Engine No. XPAG/TD501						REMARKS
		Part No.	Illus. No.	Part No.	Commencing Engine No.	Part No.	Commencing Engine No.	
Cylinder Head and Valve Gear— *continued*								
Valve rocker with bush (Nos. 2 and 6 valves)	2	SA2215/4	J72					
Valve rocker with bush (Nos. 3 and 7 valves)	2	SA2216/4	J73					
Bush for valve rocker (Nos. 2, 6, 3, and 7 valves)	4	X22700	J74	X20036	9008			
Adjusting screw—rocker	8	X20194	J75	X21231	17298			
Locknut—adjusting screw	8	CA1030	J76					
Rear cover—cylinder head	1	170082	F48					
Joint—rear cover-plate	1	X22438	F49					
Water outlet pipe (studded)	1	SA2430	F51					
Stud—thermostat	2	CB1717	F52					
Nut—thermostat stud	2	CA1126						
Spring washer—thermostat stud	2	CA1283						
Bolt—water outlet pipe	4	CA1258	F53					
Spring washer—water outlet pipe	4	CA1283						
Joint—water outlet pipe	1	X22524	F54					
Gasket—cylinder head	1	X24373	F55	X24481	17969	168423	22735	
Nut (securing cylinder head)	10	QA11123	F56					
Cylinder head cover assembly	1	SA2407/4	F57	SA2407/5	24116			
Plug bolt	2	JA5384						
Washer—plug bolt	2	X22767						
Valve instruction plate	1	X24299		168729	24116			
Rivet—plate	2	X679/26						
Oil filler cap	1	X24439	F58					
Joint—cylinder head cover	1	X22526	F59					
Nut—cylinder head cover	2	X22782	F60					
Washer—cylinder head cover	2	LA7088	F61					
Sparking plug	4	97H610		3H2006	22735			
Terminal—plug (insulated)	4	AEC388						
Push-rod assembly	8	SA2410	J77	168431	17298			
Tappets	8	AEG127	F78					
AMENDMENTS								
MANIFOLDS								
Induction manifold (with restrictor)	1	**SA2440**						
End plug—induction manifold	2	LA7185						
Restrictor—manifold	1	X24091						
Bolt—induction manifold restrictor	1	JA5384						
Joint—carburetter	2	X22124						
Bolt securing carburetter	4	LA7153						
Spring washer—carburetter	4	CA1284						
Exhaust manifold (studded)	1	**SA2409**						
Stud—exhaust manifold flange	3	X15126	F62					
Nut—stud	3	CA1605	F63					
Joint—exhaust manifold	1	X22581	F64					
Clamp—exhaust manifold	4	X24061	F65					
Nut—exhaust manifold clamp	4	CA1126	F66					

DESCRIPTION	No. off per Car	Commencing Engine No. XPAG/TD501						REMARKS
		Part No.	Illus. No.	Part No.	Commencing Engine No.	Part No.	Commencing Engine No.	
SERVICE GASKET KITS								
Service set of gaskets—power unit	1 set	301156		301470	17969	301649	22735	
Service set of gaskets—decarbonizing	1 set	MG862/52		301471	17969	301650	22735	
AMENDMENTS								

DESCRIPTION	No. off per Car	Commencing Engine No.		Part No.	Commencing Engine No.	Part No.	Commencing Engine No.	REMARKS
		Part No.	Illus. No.					
AMENDMENTS								

SECTION G

ENGINE OIL SUMP AND DETAILS

ENGINE OIL PUMP AND DETAILS

ENGINE OIL PIPES AND DETAILS

WATER PUMP

FAN

DESCRIPTION	No. off per Car	Commencing Engine No. XPAG/TD501 Part No.	Illus. No.	Part No.	Commencing Engine No.	Part No.	Commencing Engine No.	REMARKS
ENGINE OIL SUMP AND OIL PIPE DETAILS								
Oil sump with baffle and drain plug	1	**SA2411/4**	**F67**					
Drain plug—sump	1	X15096	F68					
Washer—drain plug	1	AEC699	F69					
Plug—oil hole	1	OA10798	F70					
Washer for oil hole plug	1	LA7417						
Baffle—sump	1	X24392		168243	14948			
Bolt—baffle	4	JA5384						
Spring washer—baffle bolt	4	CA1282						
Packing	1	AEG126	F71					
Joint—sump to block	1	X22724	F72					
Bolt—sump—front	2	X15268	F73					
Bolt—sump—short	10	LA7431	F74					
Bolt—sump—long	2	X15269	F75					
Spring washer—sump bolt	14	X15270						
Bracket—clutch return spring	1	X24202	H21					
Bolt—bracket	1	AJD6205N	H22					
Spring washer—bolt	1	X23194	H23					
Lever—cable and connecting rod	1	SA2436	H24					
Bush—lever	1	QA11682	H25					
Fulcrum pin—lever	1	X24206	H26					
Nut—fulcrum pin	1	X23049	H27					
Washer—fulcrum pin	1	X25138	H28					
Washer—fulcrum pin—outer	1	X24208	H29					
Abutment bracket—clutch cable	1	X24204	H30					Fin. at 22716
Bolt—bracket	1	AJD6205N	H31					
Spring washer—bracket bolt	1	X23054						
Dipstick	1	X24407	F76					
Suction filter assembly	1	**168008**	**F77**	**168250**	**15372**	**168727**	**26364**	
Oil suction pipe	1	168010		168249	15372	168728	26364	
Suction filter spring	1			JA5890	15372			
Washer—suction filter spring	1			X22781				
Filter extension	1			168706				
Washer—filter extension	1			X22767				
Set screw	1			HPS0405				
Lock washer	1			168726				
Gasket	1			X22973				
Bolt for oil filter	2			JA5117				
Spring washer	2			CA1282				
Washer	2			CA1255				
Filter gauze	1	X24294	F78					Fin. at 15371
Spring—oil suction pipe	1	X22776	F79					
Fibre washer	1	X25040	F80					
Washer	1	X22781	F81					
Joint—flange	1	X22773	F82					
Bolt	2	X22780	F83					
Oil pipe assembly (pump to filter)	1	**X24451**	**F84**					Fin. at 14223
Oil pipe assembly (filter to block)	1	**X24359**	**F85**					
Bolt—banjo	4	X19089	F86					
Washer—small	4	AEG3122	F87					
Washer—large	4	X19090	F88					
Oil filter	1	**X22768**	**F89**					
Support bracket for oil filter	1	X24148	F90	X24446	2985			
Bolt—bracket	2	CA1122	F91					
Spring washer	2	CA1283						
Strap—oil filter bracket	2	MG862/445	F92					Fin. at 2984
Strap—oil filter	1	X24443		X24447	2985			Fin. at 14223
Strap—oil filter	1	X24444		X24448	2985			

DESCRIPTION	No. off per Car	Commencing Engine No. XPAG/TD501 Part No.	Illus. No.	Part No.	Commencing Engine No.	Part No.	Commencing Engine No.	REMARKS
Engine Oil Sump and Oil Pipe Details—*continued*								
Bolt—strap	1	OA10645	F93	LA7155	2985			Fin. at 14223
Nut—strap bolt	1	CA1254		X31648	2985			
Spring washer—strap bolt	1	CA1282						Fin. at 2984
Oil pump assembly (R)	1	**SA2448**		**SA2448/1**	**14224**	**SA2448/2**	**26635**	
Oil pump—bushed	1	X24185	F94	SA2442/1	14224	SA2442/2	26635	
Bush—oil pump body	2	X22403	F95					
Plug—pump body—filter head	1			163138				
Plug—oil pump body	1			OA10798	14224			
Washer—oil pump plug	1			LA7417				
Oil pump cover with valve seat	1	SA2441	F96	SA2441/1	14224	SA2446/1	20972	
Priming plug—oil pump cover	1			OA10798	20972			
Washer—priming plug	1			LA7417				
Seat—valve	1	X20850						
Plug—oil pump cover	1			OA10798				
Washer for plug	1			LA7417				
Bolt for cover	2			X21090	14224			
Washer—copper	2			X15273				
Balance valve	1			168122				
Oil filter—Purolator	1			162438				
Sump	1			300848				
Plate—sump reinforcement	1			7H1442				
Seal—sump to head	1			17H86				
Clamping plate	1			162437				
Centre tube	1			17H146				
Element	1			17H150	14224			Alternative to 164711
Circlip	1			7H23				
Pressure plate	1			300842				
Gasket—rubber	1			7H28				
Steel washer	1			7H7553				
Spring	1			300845				
Seal—sump—bottom	1			7H30				
Centre-bolt	1			300853				
Oil filter assembly—Tecalemit	1			164711				
Sump	1			17H85				
Clamping plate	1			162437				
Seal—sump to head	1			17H86				
Centre tube	1			162458				
Element	1			1H779				
Circlip	1			300841	14224			Alternative to 162438
Pressure plate	1			7H150				
Felt washer	1			7H160				
Steel washer	1			7H161				
Spring	1			7H151				
Seal—sump bottom	1			300850				
Steel washer—sump bottom	1			300851				
Centre-bolt	1			300852				
Bolt—oil filter	2	JA5384						
Washer—oil filter	2	CA1282						

AMENDMENTS

DESCRIPTION	No. off per Car	Commencing Engine No. XPAG/TD501 Part No.	Illus. No.	Part No.	Commencing Engine No.	Part No.	Commencing Engine No.	REMARKS
Engine Oil Sump and Oil Pipe Details—*continued*								
Bolt—cover—long	2	168531	F97					
Washer—copper—long bolt	2	15273						
Bolt—cover—medium	2	X22188	F98					
Bolt—cover—short	4/2	X22253	F99					Quantity reduced at 14223
Lock washer	8/4	CA1282	F100					
Oil pump shaft and gear	1	X22730	F101					
Gear—driving	1	X22731	F102					
Key—driving gear	1	JA5255	F103					
Circlip—driving gear	1	X24377	F104					
Oil pump gear (driven) with bush	1	SA1088	F105					
Bush—oil pump gear	1	X21625	F106					
Spindle—driven gear	1	OA10132	F107					
Guide—relief valve ball	1	X24118	F108					
Relief valve ball	1	AMK739	F109					
Spring—relief valve	1	X22321	F110					
Cover plug—relief valve	1	X22591	F111					
Washer—cover plug	1	X22592	F112					
Joint—oil pump body	1	X22588	F113	168120	14224			
Oil pipe (gallery to head)	**1**	**SA2426**	**F114**	**X24285**	**9408**			
Screw (banjo to block)	1	X19520	F115	X21021	9408			
Screw (banjo to head)	1	X22924	F116	X21021	9408			
Washer—screw	4	AEC346	F117					
AMENDMENTS								
WATER PUMP FAN AND THERMOSTAT								
Water pump assembly (R)	**1**	**SA2243/3**		**SA2419/2**	**6483**			
Water pump body	1	X22838	K3	X24433	6483			
Spindle—water pump	1	X30130	K4	X30133	6483			
Rotor—water pump	1	X22607	K5	X24434	6483			
Taper pin—rotor	1	JA5308	K6					
Nut—spindle	1	JA5088	K7					
Washer—spindle	1	JA4677	K8					
Fan pulley	1	X22372	K9					
Key—pulley	1	JA5732	K10					
Grease nipple	1	X19460	K11					
Dust excluder—front	1	AEH528	K12					
Cover—front dust excluder	1	RA12179	K13					
Bearing—spindle	1	AEF136	K14					
Circlip—bearing—front	2	RA12178	K15					
Circlip—bearing—rear	1	162677						
Distance tube—bearing	1	X22840	K16					
Dust excluder—rear—felt	1	X22050	K17					
Cover—dust excluder—centre	1	RA12175	K18					
Cover—dust excluder—rear	1	X22051	K19					
Circlip—spindle	1	AEB151	K20					
Seal—water pump—service kit	1	SA10914/1	K21	AEB156	6483			
Joint—pump body to block	1	X22605	K22					
Bolt—pump—short	1	CA1258	K23					
Nut—water pump bolt	2	CA1126	K24					

DESCRIPTION	No. off per Car	Commencing Engine No. XPAG/TD501		Part No.	Commencing Engine No.	Part No.	Commencing Engine No.	REMARKS
		Part No.	Illus. No.					
Water Pump Fan and Thermostat *—continued*								
Spring washer—water pump bolt	4	CA1283						
Bolt—pump—long	1	JA5052	K25					
Fan blade	**1**	**X22927**	**K26**					
Fan blade (offset)	**1**	**X22928**	**K27**					
Bolt—fan blade	4	QA11359	K28					
Spring washer—fan blade bolt	4	CA1281						
Distance piece	1	X24191	K29					
Drive belt for fan and dynamo	**1**	**X24094**	**K30**					
Bracket—engine control link	1	X24190	F118					
Washer—bracket	1	PNN105						
Engine control link (R/H thread)	1	126854	F119					
Rubber bush	2	126858	F120					
Cup washer	2	126857	F121					
Connecting pipe—pump	1	X24421	K31					
Hose—connecting pipe	1	X22609	K32					
Clip (1½" dia.)—connecting pipe	2	X19524	K33					
Thermostat	**1**	**27H197**	**K34**					
Joint—thermostat	1	QA11801	K35					
Hose—by-pass pipe	1	X24192	K36					
Clip (1½" dia.)—by-pass hose	1	X20931	K37					
Elbow—thermostat	1	27H55	K38					
Joint—elbow	1	AJJ2785						
Screw—elbow	2	27H52	K39					

AMENDMENTS

DESCRIPTION	No. off per Car	Commencing Engine No.		Part No.	Commencing Engine No.	Part No.	Commencing Engine No.	REMARKS
		Part No.	Illus. No.					
AMENDMENTS								

SECTION H

CLUTCH DETAILS

GEARBOX

DESCRIPTION	No. off per Car	Commencing Engine No. XPAG/TD501 Part No.	Illus. No.	Part No.	Commencing Engine No.	Part No.	Commencing Engine No.	REMARKS
CLUTCH DETAILS								
Clutch assembly complete	1	**N.S.P.**						
Clutch cover assembly	1	**SA2447**		**SA2447/1**				
Cover—clutch	1	7H3080	H32	7H3071	9408			
Release lever—clutch	3	X22817	H33	7H3073				
Eyebolt	3	168634	H34	7H3197	15861			
Nut—eyebolt	3	7H3193		CA880	15861			
Fulcrum pin—release lever	3	7H3061	H35	7H3067				
Strut—release lever	3	7H3060	H36	7H3069	9408			
Spring—anti-rattle—release lever	3	7H3008	H37	7H3171				
Spring—retaining—release lever	3	7H3218	H38	7H3001				
Plate—release lever	1	7H3213	H39					
Spring—pressure plate	6	7H3146	H40	7H3140	9408			
Pressure plate—clutch	1	7H3057	H41	7H3085				
Clutch release bearing and cup assembly	1	**7H3214**	**H42**					
Retainer—clutch release bearing	2	7H3185	H43					
Clutch driven plate assembly... (R)	1	**SA2446**	**H44**	**7H3215**	**9408**			
Rivet—clutch driven plate	16	7H3078	H45					
Facing kit	1 set	**7H3246**	**H46**	**7H3065**	**9408**	**7H3216**	**15861**	
Bolt—clutch cover	6	CA1122	H47					
Spring washer—clutch cover	6	CA1283						
Clutch withdrawal shaft	1	X24482	H48	168023				
Circlip—withdrawal shaft	1	X31399	H49	X19257	9408			
Fork—clutch	1	X22829	H50	X19255				
Key—clutch fork	1	JA5255	H51	CA1005				
Taper pin—clutch fork	1	MA3678	H52					
Clutch operating lever	1	X24201	H53	168021	9408			
Spring washer	1	7282						
Key—clutch lever	1	JA5255	H54	CA1005				
Taper pin—clutch lever	1	MA3678	H55					
AMENDMENTS								
GEARBOX DETAILS								
Gearbox assembly	1	**SA2906/9**		**AEB3027**	**9408**	**AEB3028**	**16482**	
Clutch housing (with bushes)	1	SA2239/3	H56	SA2239/4	9408			
Bush—clutch housing	2	X19325	H57	X20268				
Bolt securing clutch housing	10	JA5052	H58					
Spring washer—clutch housing	10	CA1283						
Clutch inspection cover	1	X19288	H59					
Screw—inspection cover	2	X22043	H60					
Gearbox casing (with studs)	1	SA2424/1	G7					
Stud—gearbox top cover	6	CB1717	G8					
Stud—speedometer casing (medium)	3	JB5968	G9					
Stud—speedometer casing (long)	1	X20505	G10					
Stud—speedometer casing (short)	2	CB1717	G11					
Plug—oil drain	1	CA1215	G12					
Washer—drain plug	1	6K432	G13					
Circlip—drain plug	1	X15868						
Bolt—gearbox to clutch housing	8	JA5052						
Spring washer—clutch housing	8	LA7281						
Oil level indicator	1	X24215	G14					
Mainshaft	1	**X24467**	**G15**	**168209**	**16978**			
Mainshaft bearing	1	AEF137	G16					
Circlip—mainshaft bearing	1	X22626	G17					

DESCRIPTION	No. off per Car	Commencing Engine No. XPAG/TD501		Part No.	Commencing Engine No.	Part No.	Commencing Engine No.	REMARKS
		Part No.	Illus. No.					
Gearbox Details—*continued*								
Guard—bearing—1st motion shaft	1	X22885	G18					
Plate—guard	1	X17080	G19					
Spring plate—guard	1	X17266	G20					
Striking dog	1	X24465	G21	X24245	6533			
Sliding hub assembly (top and 3rd), with cone	**1**	**SA2435/1**	**G22**					**Fin. at 6532**
Spring—sliding hub	6	X24248	G23					
Ball—spring	6	BLS110	G24					
Sliding hub assembly (top and 3rd), with cone	**1**		**G22**	**SA2435/2**				
Spring—sliding hub	6		G23	X24248	**6533**			
Ball—spring	7		G24	BLS110				
3rd speed gear	**1**	**X24249**	**G25**					
Rollers—3rd speed gear	32	MA3839	G26					
Collar—3rd speed gear	1	X17313	G27					
Plunger—3rd speed gear	1	AEC3181	G28					
Spring—plunger	1	AEC3182	G29					
2nd speed gear	**1**	**X24250**	**G30**					
Rollers—2nd speed gear	28	MA3839	G31					
Washer—2nd speed gear	2	X22634	G32					
Collar—2nd speed gear	1	X22635	G33					
Plunger—2nd speed gear	1	AEC3181	G34					
Spring plunger	1	AEC3182	G35					
Sliding hub (1st and 2nd) with cone	**1**	**SA2434/1**	**G36**					
1st speed gear	**1**	**X24251**	**G37**					
Spring—1st speed gear	6	AEC3179	G38					
Ball—spring	6	BLS110	G39					
Circlip	1	X22639	G40					
Distance piece	1	X22886	G41					
Layshaft	**1**	**X35020**	**G42**					
Gear unit—layshaft	1	X24216	G43					
Rollers—layshaft gear unit	28	X22377	G44					
Spacer—layshaft gear unit	1	X25015	G45					
Washer—layshaft	2	X22378	G46					
Thrust washer—front	1	X24111	G47					
Thrust washer—rear	1	X24112	G48					
Bearing plate—front	1	X24109	G49					
Bearing plate—rear	1	X24110	G50					
Screw	1	X22644	G51					
Spring washer	1	CA1282						
1st motion shaft	**1**	**X24254**	**G52**					
Bearing—1st motion shaft	1	AEF135	G53					
Circlip—1st motion shaft	1	X22649	G54					
Guard—bearing (1st motion shaft)	1	X22362	G55					
Nut—1st motion shaft bearing	1	X22650	G56					
Lock washer—bearing	1	X22651	G57					
Spigot bearing rollers	18	6K892	G58					
Oil seal—1st motion shaft	1	X22653	G59					
Reverse gear (with bush)	**1**	**SA2256**	**G60**					
Bush—reverse gear	1	X17342						
Shaft—reverse gear	1	X17343	G61					
Plug—reverse shaft	1	LA7395	G62					
Screw—reverse shaft	1	X22655	G63					
Spring washer—reverse shaft	1	CA1283						

DESCRIPTION	No. off per Car	Commencing Engine No. XPAG/TD501		Part No.	Commencing Engine No.	Part No.	Commencing Engine No.	REMARKS
		Part No.	Illus. No.					
Gearbox Details—*continued*								
Selector mechanism								
Top and 3rd gear selector	1	SA2273	G64					
Locating screw—selector	1	MA3641	G65					
Top and 3rd gear shifter	1	X22657	G66					
Locating screw—shifter	1	MA3641	G67					
Distance tube—top and 3rd	1	X22848	G68					
Shaft—top and 3rd shifter assembly	1	SA2402/3	G69	SA2402/5	16482			
Shaft—top and 3rd shifter	1	X24457	.....	168223	16482			
Pin for shaft	1	AEC3187						
Rivet for shaft	1	AEC3188						
Circlip—shaft	1	X24377	G131					
1st and 2nd gear shifter	1	X22889	G70					
Locating screw	1	MA3641	G71					
1st and 2nd gear selector	1	X22890	G72					
Locating screw	1	MA3641	G73					
Shaft—1st and 2nd shifter	1	X24449	G74					
Stop—shaft	1	X22851	G75					
Locating screw—stop	1	MA3641	G76					
Reverse gear selector	1	X22893	G77					
Plunger—reverse gear selector	1	X17186	G78					
Spring—plunger	1	AEG3107	G79					
Ball—reverse plunger	1	BLS110	G80					
Spring—ball	1	AEG3102	G81					
Locating screw	1	MA3641	G82					
Shaft—reverse selector	1	X24369	G83					
Steady—reverse selector shaft	1	X22850	G84					
Locating screw steady	1	MA3641	G85					
Gear shifter reverse—upper	1	X22892	G86					
Locating screw for shifter	1	MA3641	G85					
Gear shifter reverse—lower	1	X24259	G87					
Shaft—reverse gear shifter	1	X22665	G88					
Locating screw—shaft	1	X15141	G89					
Spring washer	1	CA1282						
Reverse gear link assembly	1	SA2272	G90					
Fulcrum pin link	1	X17350	G91					
Nut—fulcrum pin	1	JA5088	G92					
Washer—fulcrum pin	1	X15176	G93					
Ball—shifter shaft	5	BLS110	G94					
Spring—shifter shaft	3	AEC3189	G95					
Plug—ball hole (in gearbox casing)	1	MA3650						
Gearbox cover	1	**X22895**	**G96**					
Gasket—cover	1	X22671	G97					
Nut—cover	6	CA1126	G98					
Spring washer—cover nut	6	CA1283						
Filler plug—gearbox	1	SA1340	G99					
Washer for plug	1	163422	G100					
Rear casing	1	**X24220**	**G101**					
Gasket for rear casing	1	X22736						
Nut—rear casing	6	CA1126	G102					
Spring washer—casing nut	6	CA1283						
Ball bearing	1	97H551	G103					
Guard	1	X19171	G104					
Oil retaining washer	1	X19147	G105					
Hole plug—reverse light	1	AEG385	G106					
Speedometer gear	1	X22900	G107	168210	16978			

DESCRIPTION	No. off per Car	Commencing Engine No. XPAG/TD501		Part No.	Commencing Engine No.	Part No.	Commencing Engine No.	REMARKS
		Part No.	Illus. No.					
Gearbox Details—*continued*								
Key for speedometer gear	1	X20139		2K2124	16978			
Speedometer pinion	1	X17260	G108					
Bearing—pinion	1	X25313	G109					
Screw—pinion bearing	2	CB1979	G110					
Flange—universal joint	1	X24423	G111					
Washer—flange	1	QA11200	G112					
Nut—flange to mainshaft	1	X17356	G113					
Gearbox remote control assembly	**1**	**SA2417/1**		**SA2417/2**	**16482**			
Remote control cover	1	X24379	G114	168222	16482			
Gasket—cover	1	X22899	G115					
Cover bolt to rear casing	4	CA1258	G116					
Spring washer	4	CA1283						
Support cap—remote control cover	1	168221						
Bolt—support cap	2	X15175		LA7071	28167			
Spring washer	2	X25112						Fin. at 28166
Core plug—housing	1	LA7185						
Housing cover plunger	1	AEG3124	G117					
Plug—operating shaft	1	X20298	G118					
Spring—operating shaft	2	AEG3123	G119					
Washer—operating shaft	1	LA7417						
Remote control shaft	1	X24380	G120					
Selector lever—front	1	X24032	G121					
Selector lever—rear	1	X22198	G122					
Ball—lever	1	BLS108	G123					
Key—actuating shaft and selector levers	2	JA5732	G124					
Bolt—actuating shaft and selector levers	2	RA12104	G125					
Spring washer—shaft	2	CA1282						
Change speed lever	1	X22197	G126					
Snug—change speed lever	2	AEG3106						
Knob—change speed lever	1	X19177	G127					
Locknut—knob	1	X31214						
Cover—lever	1	AEG3104	G128					
Spring — anti-rattle — change speed lever	1	AEG3105	G129					
Circlip—cover	1	AEG3103	G130					

AMENDMENTS

DESCRIPTION	No. off per Car	Commencing Engine No.		Part No.	Commencing Engine No.	Part No.	Commencing Engine No.	REMARKS
		Part No.	Illus. No.					
AMENDMENTS								

SECTION J

CARBURETTERS

AIR CLEANER

PETROL PUMP

DESCRIPTION	No. off per Car	Commencing Engine No. XPAG/TD501 Part No.	Illus. No.	Part No.	Commencing Engine No.	Part No.	Commencing Engine No.	REMARKS
CARBURETTER, AIR CLEANER, AND PETROL PUMP								
Front carburetter complete	1	**AJH5302**	**L1**					
Rear carburetter complete	1	**AJH5303**	**L2**					
Carburetter	pair	AUC549						
Flexible coupling assembly	2	AUC4334	L3					
Bolt—coupling	4	AUC2269	L5					
Nut—coupling bolt	4	AUC2673	L6					
Washer—coupling bolt	4	AUC4612						
Connecting rod—jet levers	1	A1079/1	L7					
Fork end—connecting rod	2	AUC2256	L8					
Nut—fork end	2	AUC2156	L9					
Pivot pin—fork end	2	AUC2108	L10					
Needle—standard	2	**AJH5292**						
Air cleaner	1	**X35063**	**F122**					
Clip—air cleaner	1	LA7171	F123					
Stud—air cleaner	1	168390						
Wing nut—air cleaner stud	1	WGN012	F124					
Washer—air cleaner stud	1	PWZ103						
Breather hose—air cleaner	1	168424	F125					
Clip—breather hose	2	X31197	F126					
Pipe to air cleaner	1	X24277	F127					
Bolt—air cleaner pipe	4	CA1258						
Spring washer—bolt	4	CA1283						
Stud—inlet manifold	1	X24438						
Nut—inlet manifold stud	1	X31214						
Locknut	1			X31648	9408			
Washer—plain	2			PWZ105				
Spring washer stud	1	CA1283						
Joint—pipe to carburetter	2	X22929	F128					
Petrol pump	1	**AUA425**	**A137**					
End cover—petrol pump	1	AUA1466						
Valve disc—petrol pump	1	AUA839						
Elbow—petrol pump	1	AUA1478	A138					
Bracket—petrol pump	1	128355						
Mounting rubber bracket	2	53626						
Retainer—mounting rubber	1	53627						

AMENDMENTS

SECTION K

DYNAMO
STARTER
DISTRIBUTOR
INSTRUMENT PANEL
AMMETER
SPEEDOMETER
REVOLUTION COUNTER AND CLOCK
OIL GAUGE
HARNESS CABLE
BATTERY
HORN
IGNITION COIL
REGULATOR BOX
WINDSCREEN WIPER
LAMPS

DESCRIPTION	No. off per Car	Commencing Chassis No. TD0251		Part No.	Commencing Chassis No.	Part No.	Commencing Chassis No.	REMARKS
		Part No.	Illus. No.					
ENGINE ELECTRICAL EQUIPMENT								
Dynamo	1	**X24419**		**X24469**	**E8142**			
Band—cover	1	7H5029						
Brushes	set	7H5028						
Spring—brush tension	set	7H5031						
Bracket—commutator end	1	27H5428		27H5420	E8142			
Bearing—commutator end	1	7H5030		17H5407				
Bracket—drive end	1	7H5033		7H5388				
Bearing—drive end	1	97H626						
Armature	1	27H5429		37H5207	E8142			
Nut—shaft	1	7H5034						
Field coils	set	7H5071						
Bolt—through-fixing	2	301605						
Oiler	1	7H5527						
Sundry parts	set	7H5376						
Bracket—dynamo	1	X22853	F129					
Bolt—dynamo bracket	2	CA1122	F130					
Spring washer—bracket bolt	2	CA1283						
Swivel bolt—long—dynamo	1	QA11093						
Swivel bolt—short—dynamo	1	JA5052	F131					
Spring washer—bolt	2	CA1283						
Nut—swivel bolt	2	CA1126	F134					
Adjusting link	1	X24416	F132					
Bolt—link	1	CA1122	F133					
Distance piece—link	1	X24417						
Dynamo locking bolt	1			168160	9408			
Washer for bolt	1			PWZ105				
Fan and blanking plate assembly	1	AEC82						
Pulley—dynamo	1	X24468	F135					
Starter	1	3H952						
Band—cover	1	7H5038						
Brushes	set	7H5040						
Spring—brush tension	set	7H5043						
Main spring	1	7H5045						
Pinion and barrel	1	7H5046						
Retaining spring—pinion	1	7H5047						
Cap—shaft	1	7H5039						
Bracket—commutator end	1	7H5041						
Bearing—commutator end	1	7H5042						
Nut—shaft	1	7H5044						
Bracket—drive end	1	7H5048						
Bearing—drive end	1	AJB5068						
Armature	1	7H5050						
Field coils	set	7H5051						
Bolt—through-fixing	2	17H5444						
Sundry parts	set	7H5156						
Adaptor plate—starter	1	7H5159						
Cap for shaft end	1	7H5074						
Bolt—starter to block	3	CA1095						
Spring washer	3	CA1284						
Distributor	1	**27H5204**		**168489**	**24489**			
Cap	1	7H5161		301581				
Clip—cap	2	17H5055		17H5497				
Brush and spring	1	7H5085		17H5065				
Rotor arm	1	7H5086						
Contact set	1	7H5087						
Condenser	1	7H5088		17H5533	24489			
Contact breaker	1	27H5387						
Cam	1	7H5089		17H5500	24489			

DESCRIPTION	No. off per Car	Commencing Chassis No. TD0251 Part No.	Illus. No.	Part No.	Commencing Chassis No.	Part No.	Commencing Chassis No.	REMARKS
Engine Electrical Equipment—*continued*								
Distributor								
Springs—automatic advance	set	27H5071		27H5430	24489			
Weights	set	7H5231		17H5095				
Toggles	set	7H5595		17H5069				
Shaft and action plate	1	27H5070		17H5431				
Bearing—top	1	7H5093						
Bearing—bottom	1	7H5094		17H5499	24489			
Securing plate	1	67257		17H5502				
Drive gear	1	X24115						
Pin—drive gear	1	CB2257						
Adjusting clip	1	X22799						
Locking screw—distributor (clip to block)	1	QA11347						Fin. at 20941
Clamping cotter	1			163405	20942			
Washer	1			164119				
Nut	1			AJD8104				
Spacer for cable	1	X22383						
Distributor earthing wire	1	X31173						
Distributor suppressor	1	X24464						
AMENDMENTS								
ELECTRICAL EQUIPMENT AND INSTRUMENTS								
Panel—instrument—complete	1	27H5223		500732	10779			
Panel—instrument—complete (LHD)	1	136687		500733	10751			
Panel—instrument—complete	1			500815	18883			
Panel—instrument—complete (LHD)	1			500816				
Panel—instrument—complete	1			500865	22371			
Panel—instrument—complete (LHD)	1			500866				
Plug button	1	500864						Fin. at 22370
Washer for plug button	1	138663						
Panel—bare—with socket holders	1	139016						
Switchbox	1	27H5059						
Ammeter	1	**27H5139**		**500568**	**10779**			
Horn and dipper switch	1	27H5106						
Horn switch	1			500851	18883			
Dipper switch—foot-operated	1			**2H4969**				
Dip switch bracket	1			500799				
Buffer	1			ADA803				
Panel light switch	1	2H1069						
Fog lamp switch	1	2H1069						
Ignition warning light	1	2H3827						
Bulb	1	2H4440						
Fuel warning light	1	37H5058						
Bulb	1	2H4440						
Cable—panel	1	300255		138538	18883			
Rheostat panel light switch	1			**500727**	**RHD—**			
Knob				138540	**10779**			
Grub screw				138541	**LHD—**			
					10751			

DESCRIPTION	No. off per Car	Commencing Chassis No. TD0251 Part No.	Illus. No.	Part No.	Commencing Chassis No.	Part No.	Commencing Chassis No.	REMARKS
Electrical Equipment and Instruments—*continued*								
Bulb holder—panel illumination	3	27H5154						
Bulb—panel illumination	4	2H4732						
Flasher warning light	1			138632	22371			
Trafficator switch bracket	1			271261				
Ignition barrel lock with key	1	7H9830						Always quote key number when ordering replacements
Key for ignition	1	ANK4646						
Speedometer (miles)	**1**	**27H224**		**500527**	**10779**	**500616**	**17548**	
Glass—speedometer	1	27H19		AJC5065	10779			
Rubber packing—internal	1	27H20						
Rubber packing—external	1	27H21						
Rim—glass	1	27H22		301171	10779			
Clamp—speedometer	1	27H23		301172				
Nut—clamp	1	27H7						
Cable assembly — speedometer (5′ 6″ long)	**1**	**300220**						
Cable—inner	1	300249						
Cable—outer	1	300250						
Revolution counter and electric clock	**1**	**300222**		**500529**	**10751**			
Glass	1	27H19		AJC5065				
Rubber packing—internal	1	27H20						
Rubber packing—external	1	27H21						
Rim—glass	1	27H22		301171	10751			
Clamp—revolution counter	1	27H23		301172				
Nut—clamp	2	27H7						
Clock	1	300248		301174	10751			
Cable—revolution counter	**1**	**27H209**						
Cable—inner	1	27H24						
Cable—outer	1	27H25						
Reduction box for revolution counter on dynamo	**1**	**27H210**						
Attachment	1	27H211						
Driving spindle	1	27H26						
Nut	1	27H27						
Collar	1	27H28						
Sleeve	1	27H29						
Screw for collar	1	27H30						
Clip—revolution counter cable	1	82149						
Grommet—revolution counter drive	1	134995						
Bush	1	84578						
Oil pressure gauge	**1**	**27H226**						
Glass—oil gauge	1	27H10						Fin. at 13913
Rubber packing—glass	1	27H11						
Rim—oil gauge glass	1	27H12						
Water temperature and oil pressure gauge	1	500154		500553	13914			
Adaptor	1			500611				
Washer	1			500612				
Clip	3			81738				
Grommet	1			H7467				
Oil gauge pipe assembly	**1**	**136715**		**500567**	**10479**			
Flexible connection—oil gauge	1		F136	83866				
Connector—oil pipe	1	83875	F137					
Grommet—oil gauge pipe	1	84138						
Grommet—oil gauge pipe	1	91213						

DESCRIPTION	No. off per Car	Commencing Chassis No. TD0251 Part No.	Illus. No.	Part No.	Commencing Chassis No.	Part No.	Commencing Chassis No.	REMARKS
Electrical Equipment and Instruments—*continued*								
Harness cable—complete	**1**	**500133**		**500563**	**8142**			
Harness cable—complete	1			500824	19300			
Harness cable—complete **(LHD)**	1			500852	19900			
Harness cable—main	1	500126		500615	8142			
Harness cable—main	1			500848	19300			
Harness cable—main **(LHD)**				500853	19900			
Harness cable—tail	1	500127		500849	19300			
Harness cable—tail **(LHD)**	1			500854	19900			
Harness cable—flasher (N.A.) **(LHD)**				500855	19900			
Lead—battery—positive to earth	1	500128						
Lead—battery—negative to starter switch	1	500129						
Lead—battery—starter switch to starter	1	500130						
Lead—battery—engine to earth	1	500131						
Cable—dipper switch **(LHD)**				500856	19900			
Grommet—harness through dash	1	51134						
Clip—harness to side-member	8	95100						
Clip—harness to frame stiffener	1	95104						
Clip—harness to front frame	1	95104						
Clip—harness to front extension—near-side	2	5088						
Clip—harness to dash	1	51181						
Clip—harness to steering rack	2	ACH8650						
Clip—harness to dash	1	95174						
Banjo clip—tail lamp wire to cross-member	3	5873						
Clip—tail lamp wire to body	2	3161						
Clip—sidelamp cable	2	54347						
Clip—wiper wire	3	135671						
Clip—battery feed and starter switch cables	1	80492						
Clip—harness to dash support tube	2	81738						
Grommet—starter pull	1	86663						
Battery (GTWA) (12-volt)	**1**	**N.S.P.**						
Bolt—battery	2	136691						
Drip cups—battery	6	27H5084						
Clamp—battery	1	131957						
Base—battery box	1	133656						
Screw—battery lug	2	186111						
Tray—battery	1	183528		500805	18883			
Horn—low note	**1**	**3H713**						
Horn—high note	**1**	**3H714**						
Bracket	2	7H5291						
Cover	2	7H5124						
Contact set	2	7H5126						
Diaphragm	2	17H5002						
Resistance	2	17H5003						
Sundry parts	2 sets	17H5001						
Ignition coil	**1**	**3H520**						
Nut	2	17H5122						
Cap for coil	1	3H1835						
Regulator box	**1**	**2H4929**		**17H5336**	**8142**			
Cover	1	7H5522						
Clip	1	7H5128						

DESCRIPTION	No. off per Car	Commencing Chassis No. TD0251 Part No.	Illus. No.	Part No.	Commencing Chassis No.	Part No.	Commencing Chassis No.	REMARKS
Electrical Equipment and Instruments—*continued*								
Resistance	1	7H5066						
Fusebox	1			500562	8142			
Cover	1			7H5196				
Starter switch	1	3H949						
Bootee	1	500320						
Steering column—dummy horn-push	1	136865						
Motor—windscreen wiper	1	27H5087		138616	22315			
Cover	1	7H5367						
Brushes	set	27H5432		7H5368	22315			
Brush gear	1	27H5101						
Springs	set	27H5025						
Armature	1	7H5369						
Field coils	set	37H5500						
Wiper arm assembly—dual	1	A912						
Blade—R/H	1	27H5089						
Blade—L/H	1	27H5089						
Arm only—R/H	1	301441						
Arm only—L/H	1	301442						Fin. at 22314
Bearing	1	27H5112						
Blade	1	27H5089						
Coupling bar	1	27H5011						
Wiper arm and blade assembly—R/H	1			138618				
Wiper arm and blade assembly—L/H	1			138617				
Arm—R/H	1			138666				
Arm—L/H	1			138667	22315			
Blade	2			27H5089				
Stop rubber	2			2H7954				
Coupling bar	1			138621				
Relay box **(LHD)**	1			3H1454				
Flasher unit **(LHD)**				11G9093				
Flasher unit switch less lever **(LHD)**	1			AMK5607	22371			
Lever—flasher unit switch **(LHD)**	1			AMK5608				
Grommet—wiper cable through dash	1			91213				
LAMPS								
Headlamp—dip left—c/p	2	300602		ACG5030	26180			
Headlamp—dip left—painted, with c/p rim	2	301017		ACG5030	26180			
Rim	2	17H5403						
Wire—fixing	2 sets	7H5167						
Light unit	2	7H5483						
Adaptor	2	7H5059		300603	7624			
Nut—fixing	2	27H5055						
Bulb	2	2H4743		3H1892	7624			
Headlamp—vertical dip—c/p	2	17H5225		ACG5031	26180			
Headlamp—vertical dip—painted, with c/p rim	2	301018		ACG5031	26180			
Rim	2	17H5403						
Wire—fixing	2 sets	7H5167						
Light unit	2	7H5485						
Adaptor	2	300603						
Nut—fixing	2	27H5055						
Bulb	2	3H921						
Headlamp—dip right—c/p (N.A.) (LHD)	2	300607		ACG5034	26180			
Headlamp—dip right—painted, with c/p rim **(N.A.)** **(LHD)**	2	301019		ACG5034	26180			
Rim	2	17H5403						

DESCRIPTION	No. off per Car	Commencing Chassis No. TD0251 Part No.	Illus. No.	Part No.	Commencing Chassis No.	Part No.	Commencing Chassis No.	REMARKS
Lamps—*continued*								
Wire—fixing ..... **(LHD)**	2 sets	7H5167						
Adaptor ..... **(LHD)**	2	300603		17H5244	26180			
Nut ..... **(LHD)**	2	27H5055						
Headlamp—dip right—c/p (LHD)	**2**	**300607**		**ACG5032**	**26180**			**Not North America**
Headlamp—dip right—painted, with chrome rim	2	301019		ACG5032	26180			
Rim	2	17H5403						
Wire—fixing	2 sets	7H5167						
Light unit	2	7H5484						
Adaptor	2	300603						
Nut	2	27H5055						
Bulb	2	3H1893						
Headlamp—dip right—France (LHD)	**2**			**ACG5033**				
Rim	2			17H5403				
Wires—fixing	2 sets			7H5167				
Light unit	2			7H5486	**26180**			
Adaptor	2			7H5062				
Nut—fixing	2			27H5055				
Sidelamp assembly—c/p	**2**	**2H1150**						
Sidelamp assembly—c/p ..... **(LHD)**	2			27H5192	22371			N. America
Sidelamp—painted	2	301016						Alternative to 2H1150
Rim and glass	2	7H5217						
Screw—rim	2	27H5026						
Bulb holder	2	7H5539		27H5193	22371			
Bulb	2	2H4442		2H4915	(N.A.)			
Stop/tail lamp assembly	**2**	**37H5381**		**3H1814**	**21303**			
Rim	2	7H5297		7H5182				
Screw—fixing	4	139256						Fin. at 21302
Glass	2	7H5147		7H5183	21303			
Bulb holder	2	7H5111						
Cover	2	136884		7H5184	21303			
Bulb	2	1F9026						
Number-plate lamp	**1**	**3H1813**						
Cover	1	7H5185						
Glass	1	7H5121						
Sundries	set	7H5123						
Gasket—glass seating	1	7H5122						
Grommet—cable	1	7H5164						
Bulb	1	2H4817						
AMENDMENTS								
ELECTRICAL EQUIPMENT—OPTIONAL EXTRAS								
Fog lamp	**1**	**27H5190**						
Rim	1	7H5365						
Light unit	1	7H5320						
Screw—rim fixing	1	17H5042						
Wires—lamp unit fixing	set	17H5167						
Junction box	1	27H5191						
Nut—lamp fixing	1	27H5054						
Bulb	1	2H4743						

DESCRIPTION	No. off per Car	Commencing Chassis No. TD0251		Part No.	Commencing Chassis No.	Part No.	Commencing Chassis No.	REMARKS
		Part No.	Illus. No.					
Electrical Equipment — Optional Extras—*continued*								
Distributor	1	168722						**Required when converting XPAG/TD2 to XPAG/TD3 (high compression)**
Cover	1	301581						
Clip—cover	2	17H5497						
Brush—spring set	1	17H5065						
Rotor arm	1	7H5086						
Contact set	1	7H5087						
Condenser	1	17H5533						
Cam	1	27H5421						
Springs—automatic advance	set	27H5422						
Weights—automatic advance	set	17H5095						
Toggles	set	17H5069						
Shaft and action plate	1	17H5552						
Bearing—bottom	1	17H5071						
Sundry parts	set	17H5502						

AMENDMENTS

SECTION L

NUMBER-PLATES

BUMPERS

WINGS

RUNNING-BOARDS

FRONT APRON

REAR VALANCE

BONNET

SPARE WHEEL CARRIER

DESCRIPTION	No. off per Car	Commencing Chassis No. TD0251		Part No.	Commencing Chassis No.	Part No.	Commencing Chassis No.	REMARKS
		Part No.	Illus. No.					
NUMBER-PLATES								
Front number-plates	1	**ACH5835**						
Bracket—front number-plate	2	84225						
Rear number-plate	1	**136292**						
Holder—rear number-plate	1	135004						
Lamp bracket	1	136271						
Mounting bracket—rear number-plate	1	139084	A147					
Clamp—rear number-plate—mounting bracket	2	136269	A146					
Buffer—holder	1	85601						
¼" BSF × ⅝" Phillips recessed-head screw—number-plate to bracket	2	AJD1445Z						
¼" BSF × ½" Phillips recessed-head screw—bracket to bumper	2	AJD1444Z						
AMENDMENTS								
FRONT BUMPER								
Front bumper assembly	1	136037						
Bumper bar	1	500119						
Main spring	1	500120						
Bracket—bumper	2	500121						
Packing piece	4	500124						
Bolt	2	500143						
Over-rider	2	133602						
Distance tube	2	136307						
AMENDMENTS								
REAR BUMPER								
Rear bumper assembly	1	136201						
Bumper bar	1	500125						
Main spring	1	500123						
Bracket—bumper	2	500122						
Packing piece	5	500124						
Bolt	3	500143						
Over-rider	2	133602						
Distance piece	2	139718						
Bolt	1	500069						
AMENDMENTS								
WINGS								
Front wing—R/H	1	**136901**						
Front wing—L/H	1	**136902**						
Nut retainer	6	107308						
Piping—front wing (52")	2	AJJ3031						
Bracket—headlamp—R/H	1	136337						
Bracket—headlamp—L/H	1	136338						
Special bolt	2	81620						
Packing—headlamp bracket	2	81622						
Phillips recessed rd. head S/T screw—wing to body	6	PTZ804						

DESCRIPTION	No. off per Car	Commencing Chassis No. TD0251 Part No.	Illus. No.	Part No.	Commencing Chassis No.	Part No.	Commencing Chassis No.	REMARKS
Wings—*continued*								
Rear wing—R/H	1	**136852**		**500800**	**21303**			
Rear wing—L/H	1	**136853**		**500801**				
Tapping ring	2	500333						Fin. at 21302
Philidas nut ($\frac{5}{16}$" BSF)	2	AJD8135Z						
Piping for rear wing (53")	2	AJJ3031						
Tail lamp plinth	2			500807	21303			
Gasket—tail lamp plinth	2			500808				
Screw	6			186617				
Nut	6			UFN1032				
Washer	6			485/D				
RUNNING-BOARDS								
Running-board—R/H	1	**136302**						
Running-board—L/H	1	**136303**						
Tread strip	4	136308						
Tread strip	2	136309						
Rivets—tread strips	20	87025						
Joint rubber—R/H—running-board to wing	1	136315						
Joint rubber—L/H—running-board to wing	1	136316						
Buffer—running-board to wing	2	19327						
FRONT APRON								
Front apron assembly	1	**500049**						
Support bracket—R/H	1	500050						
Support bracket—L/H	1	500051						
Piping for front apron (21")	1	AJJ3031						
Rear valance	1	136290						
Bolt—chromium-plated	6	AJD1546C						
Washer	6	500871						
BONNET AND FASTENERS								
Bonnet complete	1	**136312**						
Bonnet side—R/H	1	**300209**						
Bonnet side—L/H	1	**300210**						
Bonnet top—R/H	1	**300211**						
Bonnet top—L/H	1	**300212**						
Hinge rod—side to top	2	300213						
Centre head	1	300215						
Support—hinge—outer	1	81810						
Support—hinge—inner	1	81811						
Bonnet body protection	4	53865						
Rest rubber—bonnet	1	91208						
Bonnet fasteners with handle—R/H	2	**MG516/1**						
Handle—R/H—bonnet fastener	2	82092						
Bonnet fasteners with handle—L/H	2	**MG516/2**						
Handle—L/H—bonnet fastener	2	82093						
Bracket—fastener	4	81781						
Bonnet buffer	2	81815						
AMENDMENTS								

DESCRIPTION	No. off per Car	Commencing Chassis No. TD0251		Part No.	Commencing Chassis No.	Part No.	Commencing Chassis No.	REMARKS
		Part No.	Illus. No.					
SPARE WHEEL CARRIER								
Spare wheel carrier bracket assembly	**1**	**136810**	**A143**	**500493**	**12419**			
Domed nut—carrier	4	139100						
Washer—C/P—carrier	4	AJD7153						
Washer—C/P—carrier	4	PWP105						
Clamp bracket—lower—carrier	2	136272	A144					
Wheel nuts—carrier	3	ATB4163		ATB4100	12419			
Plug—spare wheel carrier	1	139089	A145					
AMENDMENTS								

SECTION M

DASHBOARD

PROPELLER SHAFT TUNNEL

GEARBOX COVER

BODY DETAILS

DOORS

SEATS

FASCIA BOARD

WINDSCREEN

HOOD

SIDE-CURTAINS

DRIVING MIRROR

FLOORBOARDS

CARPETS

DESCRIPTION	No. off per Car	Commencing Chassis No. TD0251 Part No.	Illus. No.	Part No.	Commencing Chassis No.	Part No.	Commencing Chassis No.	REMARKS
DASHBOARD AND BODY MOUNTING DETAILS								
Dashboard complete (with toolbox and battery box)	**1**	**MB22248**						
Battery box assembly	1	136194						
Tool box assembly	1	136199						
Fume excluder—steering column	1	136678						
Retainer—fume excluder	1	136676						
Clip—column fume excluder	1	ACA5243						
Propeller shaft tunnel	1	136291						
Support—floor—R/H	1	136279						
Support—floor—L/H	1	136280						
Toeboard	1	136267						
Foot-ramp—passengers	1	136864						
Cover—gearbox	1	136314						
Sealing cover—gearbox control	1	136711						
Cover-plate—gearbox	1	127041						
Nut—cover-plate	1	128813						
Cover—inspection hole	1	60464						
Packing—rear body support bracket	4	127057						
Packing—centre body support bracket	2	127057						
Anti-drum felt—gearbox cover	1	139059						
Clip for starter handle	2	139515						
Packing—front floor support	2	127057						
Packing—rear floor support	2	127062						
Packing—floor support angle	2	500000						
AMENDMENTS								
BODY DETAILS								
Body trimmed complete	**1**	**MB22504**						
Body shell—primed		MB22379						
Door panel—R/H		MB22002						
Hinge—top—door—R/H	1	MB21874						
Hinge—bottom—door—R/H	1	MB21876						
Door check complete	**2**	**MB22041**						
Arm—check rod	2	MB22042						
Buffer—check rod	2	MB19327						
Check rod knuckle—door	2	MB19326						
Nut—hexagon—check rod knuckle	4	AJD8014						
Locknut—check rod knuckle	2	MB20192						
Washer—steel—door check	4	MB20190						
Washer—fibre—door check	2	MB20193						
Door lock—R/H	**1**	**MB19507**						
Screw—door lock cover	2	7H9914						
Tread plate—door—L/H	1	MB22029						
Tread plate—door—R/H	1	MB22030						
Catch plate complete	**2**	**MB21951**						
Striker plate—catch plate	2	MB21952						
Striker—catch plate	2	AJJ404						

DESCRIPTION	No. off per Car	Commencing Chassis No. TD0251						
		Part No.	Illus. No.	Part No.	Commencing Chassis No.	Part No.	Commencing Chassis No.	REMARKS
Body Details—*continued*								
Bush—catch plate	2	7H9920						
Nut—domed—catch plate	2	7H9921						
Washer—catch plate	2	7H1448						
Door handle	**2**	**MB21994**						
Socket—side curtain	**2**	**MB19322**						
Fixing stud with plate—side-curtain	2	MB21959						
Clamp securing side-curtain	2	MB19331						
Door panel—L/H	1	MB22001						
Hinge—top—door—L/H	1	MB21873						
Hinge—top—door—L/H	1	MB21875						
Door lock—L/H	**1**	**MB19506**						
Cover—door lock—L/H	1	7H9913						
Screw—door lock cover	2	7H9914						
Door buffer	4	MB19329						
Seat squab (upholstered) complete	**1**	**TD36**						
Seat squab—bare	1	MB22108						
Hinge—seat and squab	2	19354						
Sleeve—hinge	2	MB20856						
Adjustable fittings—seat squab	2	MB21957						
Adjusting quadrant for seat squab with brackets	2	20160						
Securing bracket—squab	2	MB21958						
Washer—fibre—seat quadrant	2	MB15831						
Nut—domed (¼" BSF)	4	MB22520						
Rail—tonneau cover	1	MB21993						
Seat cushion—R/H (upholstered)	1	TD38						
Seat cushion—L/H (upholstered)	1	TD37						
Sliding seat fittings assembly—R/H	1	MB22212						
Sliding seat fittings assembly—L/H	1	MB22211						
Rear quarter trim pad—L/H	1	TD45						
Rear quarter trim pad—R/H	1	TD46						
AMENDMENTS								
Fascia board with moulding	**1**	**TD81**		**271276**	**10778**			
Fascia board (bare)	1	MB40068		260746				
Moulding—top—fascia board	1	MB22037						
Moulding—bottom—fascia board	1	MB22038						
Moulding—glovebox aperture	1	MB22036						
Glovebox	1	MB21884						
Lid—glovebox	1	TD49						

DESCRIPTION	No. off per Car	Commencing Chassis No. TD0251 Part No.	Illus. No.	Part No.	Commencing Chassis No.	Part No.	Commencing Chassis No.	REMARKS
Body Details—*continued*								
Moulding—glovebox lid	1	MB22034						
Moulding—glovebox lid	1	MB22035						
Hinge—glovebox lid	2	MB22124						
Ball catch—glovebox lid	1	MB21995						
Knob—glovebox lid	1	MB21996						
Stop—glovebox lid	1	MB22157						
Windscreen complete—laminated	**1**	**MB21885**		**271193**	**22315**			
Windscreen complete—toughened	1	AJJ3126						
Frame—windscreen	1	MB22060		271262	22315			
Glass—windscreen	1	MB21886		271275				
Side support—bottom R/H—windscreen	1	MB22066						
Side support—bottom L/H—windscreen	1	MB22065						
Side support—top R/H—windscreen	1	MB22064						
Side support—top L/H—windscreen	1	MB22063						
Wing nut—windscreen support	2	MB20173						
Cone washer—windscreen support	2	MB20174						
Domed nut—windscreen support	2	MB20175						
Washer—windscreen support	2	MB20176						
Locknut—windscreen support	2	MB20177						
Glazing rubber—windscreen	1	MB22061						
Peg—hood fixing—windscreen—L/H	1	MB22067						
Peg—hood fixing—windscreen—R/H	1	MB22068						
Draught excluder — bottom edge screen	1	MB22062						
Rubber moulding—bottom support	2	MB21960						
Bracket—bottom corner	2	MB22057						
Set screw—screen stanchion	6	MB22169						
Distance washer	2	MB22043						
Hood complete	**1**	**MB22174**		**271188**	**20696 (RHD) 20374 (LHD)**			
Frame—hood	1	MB22423		271218				
Buffer—hood and sidescreen	2	MB20216						
Clamp bolt	2	MB19553						
Hood rail	1	MB40047						
Side-curtain—front R/H	**1**	**MB22616**						
Frame—front R/H—side-curtain	1	MB22486		271242				
Side-curtain—front L/H	**1**	**MB22615**						
Frame—front L/H—side-curtain	1	MB22485		271241				
Side-curtain—rear R/H	**1**	**MB22614**						
Frame—rear R/H—side-curtain	1	MB22488		271244				
Side-curtain—rear L/H	**1**	**MB22613**						
Frame—rear L/H—side-curtain	1	MB22487		271243	**20696 (RHD) 20374 (LHD)**			
Bead (top)—chromium-plated—side-curtain—front	2	MB22452		271253				
Bead (bottom) — chromium-plated —side-curtain—front	2	MB22453		271254				
Bead (front)—chromium-plated—side-curtain—front	2	MB22454		271255				
Bead (rear)—chromium-plated—side-curtain—front	2	MB22455		271256				
Bead (top)—chromium-plated—side-curtain—rear R/H	1	MB22468		271257				

DESCRIPTION	No. off per Car	Commencing Chassis No. TD0251 Part No.	Illus. No.	Part No.	Commencing Chassis No.	Part No.	Commencing Chassis No.	REMARKS
Body Details—*continued*								
Bead (top)—chromium-plated—side-curtain—rear L/H	1	MB22467		271257	20696 (RHD) 20374 (LHD)			
Bead (bottom)—chromium-plated—side-curtain—rear	2	MB22469		271258				
Bead (front)—chromium-plated—side-curtain—rear	2	MB22470		271259				
Bead (rear)—chromium-plated—side-curtain—rear	2	MB22471		271260				
Tonneau cover	1	AFH3739						
Tonneau cover (full size)	1	300597						
Scuttle masking board (trimmed)	1	MB22251		MB22392	0351			
Licence holder	1	180260						
Rear-view mirror	1	ADG722						
Mirror arm with stud	1	7H9877						
Arm base	1	7H9870						
Stud	1	7H9871						
Mirror frame	1	7H9872						
Spring plate for glass	1	7H9873						
Backing for mirror	1	7H9874						
Glass	1	300534						
Rim for mirror	1	300535						
Fixing screw—rim to frame	1	7H9875						
Dash casing	2			MB22391	0351			Fin. at 22406
Dash casing—R/H	1			271202	22407			
Dash casing—L/H	1			271201				
Bolt—bead to frame—rear curtains	26	MB22456						
Nut—bead to frame—rear curtains	26	MB22457						
Bolt—bead to frame—front curtain	34	MB22456						
Nut—bead to frame—front curtain	34	MB22457						
Vybak panel—front curtains	2	MB22641		271238	20696 (RHD) 20374 (LHD)			
Vybak panel—rear curtains	2	MB22642		271239				
Vybak panel—hood	1	MB22643		271237				
Side-curtain container	1	MB22209						
Hood complete—Vybak	1	MB22612						
Hood canopy	1	MB22617						

AMENDMENTS

DESCRIPTION	No. off per Car	Commencing Chassis No. TD0251 Part No.	Illus. No.	Part No.	Commencing Chassis No.	Part No.	Commencing Chassis No.	REMARKS
Body Details—*continued*								
Floorboard—R/H	1	**TD22**		**271269**	**22407**			
Floorboard—L/H	1	**TD21**		**271270**				
Carpet details								
Carpet—front R/H	1	250380						
Carpet—front L/H	1	250379						
Toeboard centre carpet assembly	1	250383						
Gearbox cover carpet assembly	1	250384						
Hand brake cover carpet assembly	1	250385						
Carpet—gearbox inspection hole	1	MB50234						
Carpet—gearbox front	1	MB50215						
Carpet—rear L/H	1	MB50219						
Carpet—rear R/H	1	MB50220						
Carpet—propeller shaft tunnel	1	MB50221						
Carpet—passenger foot-ramp	1	MB50222						
Rubberized felt—gearbox cover	1	MB50228						
Rubberized felt—front floor—L/H	1	MB50229						
Rubberized felt—front floor—R/H	1	MB50230						
Rubber heel mat	1	106045						
Socket	10	AJJ507						
Clinch plate	10	AJJ508						
Stud—single	4	AJJ509						
Stud—single	3	AJJ512						
Durable dot socket	2	7H9866						
Durable dot stud	2	7H9867						

AMENDMENTS

SECTION N

TOOL KIT

DESCRIPTION	No. off per Car	Commencing Chassis No. TD0251		Part No.	Commencing Chassis No.	Part No.	Commencing Chassis No.	REMARKS
		Part No.	Illus. No.					
TOOL KIT								
Tool roll, complete with tools	1	AJJ584						
Wheelbrace	1			ACA5217	12285			
Tappet spanner (ring type)	1	SK1118						
Jack—with handle	1			A1337				
Cylinder head nut spanner (ring type)	1	81782						
Lockheed bleeder screw drain tube and container	1			7H7064				
Tappet feeler gauge (·019")	1			AJJ582		500929	24116	
Hammer	1	AJJ282						
Combination pliers	1	AJJ279						
Grease gun	1			180954				
Tool roll	1	AJJ580						
Adjustable spanner	1	ACG5283						
Tyre levers	2			AJJ281				
Tyre valve spanner	1			AMK9958				
Distributor screwdriver and feeler	2			2H1697				
Tyre pump	1			AJJ578				
Box spanner ($\frac{1}{4}$"× $\frac{5}{16}$")	1	ET140						
Box spanner ($\frac{3}{8}$"× $\frac{7}{16}$")	1	ET141						
Box spanner ($\frac{1}{2}$"× $\frac{9}{16}$")	1	ET142						
Tommy bar	1	AJJ280						
Double-ended spanner ("$\frac{1}{4}$× $\frac{5}{16}$")	1	41273						
Double-ended spanner ($\frac{3}{8}$"× $\frac{7}{16}$")	1	41274						
Screwdriver	1	AJJ575						
Starting handle	1	X22401						
SPECIAL TOOLS FOR SERVICE USE								
Extractor—gearbox and rear axle universal joint flange	1	18G371						
Tool to assemble synchromesh units	1	18G325						
Reamer—camshaft bearing	1	18G351						
Reamer—steering box tail bearing pinion	1	18G314						
Peg spanner — steering rack ball housing	1	18G315						
"C" spanner—steering ball housing—female	1	18G311						
Extractor — ball housing—male—tie-rod 126930	1	18G312						
Extractor—crankshaft and camshaft sprockets	1	18G352						
Clutch alignment bar	1	18G279						
Bars to check front cross-member alignment	1	18G367						
Extractor—front and rear hub	1	68822						
Extractor—axle shaft	1	18G374						
Extractor—steering wheel	1	18G310						
Extractor—inner bearing—front and crankshaft	1	18G309						
Fixture—pinion positioning rear axle	1	18G281						
Axle preload check tool	1	68839						
Spanner—gudgeon pin clamp screw	1	18G327						
Suction valve grinder	1	68893						
Extractor—front hub spacer	1	18G309						
Bleeder wrench	1	18G353						

SECTION P

LUGGAGE CARRIER

MIRROR (EXTERNAL)

DOUBLE SPARE WHEEL CARRIER

COMPETITION TYRES

BADGE BAR

EXTRA SHOCK ABSORBERS

ALTERNATIVE AXLE RATIO

DESCRIPTION	No. off per Car	Commencing Chassis No. TD0251 Part No.	Illus. No.	Part No.	Commencing Chassis No.	Part No.	Commencing Chassis No.	REMARKS
OPTIONAL EXTRAS								
Luggage carrier								
Luggage carrier assembly	1	136347						
Support tube—carrier	2	136348						
Support bracket—carrier	2	180064						
Mirror—external	1	500134						
Double spare wheel carrier								
Ventilated disc wheel	1	500060						
Anchor plate	1	139603						
Distance piece	3	139605						For use with competition tyres (Dunlop 6·00—15) only
Wheel bolt	3	139604		500492	12285			
Intermediate nut	3	139606		500491	12285			
Double spare wheel carrier								
Assembly intermediate plate and studs	1	500164		500494	12285			For use when luggage carrier is fitted
Intermediate plate	1	500165						
Studs	3	500166		500490	12285			
Intermediate nut	3	500167		500491	12285			
Anchor plate	1	139603						
Wheel bolt	3	139604		500492	12285			
Competition tyres								
Ventilated disc wheel	2	131904						
Badge bar and fog lamp mounting								
Badge bar assembly	1	139698						
Bracket—badge bar	2	139559						
Fog lamp complete with stem junction box (SFT462)	1	27H5190						
Rim assembly	1	7H5365						
Reflector and glass assembly	1	7H5320						
Screw—rim fixing	1	17H5042						
Wire set—lamp unit fixing	1	7H5167						
Junction box assembly	1	7H5191						
Nut—lamp fixing	1	27H5054						
Bulb—fog lamp	1	2H4743						
Water temperature and oil pressure gauge	1	500154						
Extra shock absorbers								
Shock absorbers—front (special low setting)	2	500023						
Anchor bracket—L/H shock absorber link	1	500017						
Anchor bracket—R/H shock absorber link	1	500018						
Packing block	2	500007						
Extra shock absorbers—L/H front	1	500005						
Extra shock absorbers—R/H front	1	500006						
AMENDMENTS								

DESCRIPTION	No. off per Car	Commencing Chassis No. TD0251			Commencing Chassis No.		Commencing Chassis No.	REMARKS
		Part No.	Illus. No.	Part No.		Part No.		
Optional Extras—*continued*								
Shock absorbers—R/H rear (special low setting)	1	**500024**						
Shock absorbers—L/H rear (special low setting)	1	500025						
Anchor bracket	2	500027						
Packing block	2	500013						
Extra shock absorbers—inner R/H rear	1	500080						
Extra shock absorbers—inner L/H rear	1	500081						
Andrex shock absorbers								
Shock absorbers—R/H front	1	500144						
Shock absorbers—L/H front	1	500145						
Packing block	2	500148						
Anchor bracket	2	500146						
Shock absorbers—R/H rear	1	500149						
Shock absorbers—L/H rear	1	500150						
Bracket—spring	2	500153						
Bracket—frame—R/H	1	500151						
Bracket—frame—L/H	1	500152						
Alternative axle ratio 8/39								
Crown wheel and pinion	1	102261						
Speedometer gear	1	X24440						Fin. at 18959
Speedometer pinion	1	X24441						
Alternative axle ratio 9/41								
Crown wheel and pinion	1	102262						
Speedometer gear	1	X24442						Fin. at 18959
Speedometer pinion	1	X17212						
Drawbar attachment	1	500078						
Oil thermometer gauge	1	500554						
Clip	3	81738						
Grommet	1	H7467						

AMENDMENTS

DESCRIPTION	No. off per Car	Commencing Chassis No.		Part No.	Commencing Chassis No.	Part No.	Commencing Chassis No.	REMARKS
		Part No.	Illus. No.					
AMENDMENTS								

SECTION Q

SUPPLEMENT (L.H.D. EXPORT)

DESCRIPTION	No. off per Car	Commencing Chassis No. TD0251 Part No.	Illus. No.	Part No.	Commencing Chassis No.	Part No.	Commencing Chassis No.	REMARKS
SECTION A								
CHASSIS FRAME								
Chassis frame complete	1	136016						
Clutch and brake pedal bracket	1	139797		500589	22251			
AMENDMENTS								
SECTION B								
STEERING GEAR								
Steering rack pinion and tie-rods assembly	1	500523						
Steering rack	1	500521						
Steering rack housing	1	127153						
Steering pinion	1	136007						
Adaptor—grease nipple	1	500203						
AMENDMENTS								
SECTION D								
BRAKE PEDAL								
Brake pedal and bush	1	136469						
CLUTCH PEDAL								
Clutch pedal	1	136470						
Spacing washer between pedals	2	136478						
Clutch lever and pedal shaft	1	136856						
Grease nipple (35°)	1	84454						
Woodruff key No. 6—clutch pedal	1	AJJ602						
Extension—brake and clutch pedal	2	500116						
Bolt—pedal extension	2	JA5052						
Nut—pedal extension	2	CA1126						
Spring—pedal extension	2	CA1283						
Bracket—pedal return spring	1	126812						
Clutch rod assembly	1			500787	22251			
ACCELERATOR PEDAL								
Accelerator pedal assembly	1	136624						
AMENDMENTS								
SECTION E								
BRAKE GEAR PIPES								
Pipe—master cylinder to 4-way piece	1	AJD20						
Clip—pipe to rear axle	4	54516						
AMENDMENTS								

DESCRIPTION	No. off per Car	Commencing Chassis No. TD0251						
		Part No.	Illus. No.	Part No.	Commencing Chassis No.	Part No.	Commencing Chassis No.	REMARKS
SECTION K								
ELECTRICAL EQUIPMENT								
Instrument panel complete (identical to R.H.D. panel except for reverse positioning of instruments)	1	136687		500733	10751	500816 500866	18883 22371	
Speedometer (in kilos.)	1	27H225		500528	10751	500617	17548	
Glass	1	27H19						
Rubber packing—internal	1	27H20						
Rubber packing—external	1	27H21						
Rim	1	27H22						
Clamp	1	27H23						
Nut for clamp	2	27H7						
Speedometer cable (6′ 6″ long)	**1**	**300221**						
Cable—inner	1	300246						
Cable—outer	1	300247						
Clip—speedometer cable	1	95102						
Cable—revolution counter	1	300223						
Inner cable	1	300251						
Outer cable	1	300252						
Grommet—harness through dash	1	52186		RFN118	22371			
LAMPS								
Headlamp—vertical dip—C/P	**2**	**17H5225**		**ACG5031**	**26180**			
Headlamp—painted, with C/P rim	**2**	**301018**						
Rim assembly	2	17H5403						
Wire—fixing glass	2 sets	7H5167						
Adaptor	2	300603						
Light unit	2	7H5485						
Nut—lamp-fixing	2	27H5055						
Bulb	2	3H921						
EXPORT—N. AMERICA								
Headlamp—dip right	**2**	**300607**		**ACG5034**	**26180**			
Headlamp—painted, with C/P rim	**2**	**301019**						
Rim assembly	2	17H5403						
Wire—glass fixing	2 sets	7H5167						
Adaptor	2	300603		17H5244	26180			
Nut—lamp fixing	2	27H5055						
AMENDMENTS								
SECTION L								
NUMBER-PLATES								
Mounting bracket—rear plate	1	139085						
AMENDMENTS								

IDENTICAL TO STANDARD "TD" EXCEPT FOR THESE ITEMS

L.H.D. Cars for Export (speedometer kilos.)

DESCRIPTION	No. off per Car	Commencing Chassis No. TD0251						REMARKS
		Part No.	Illus. No.	Part No.	Commencing Chassis No.	Part No.	Commencing Chassis No.	
SECTION M								
BODY DETAILS								
Body (trimmed) complete	1	**MB22505**						
Fascia board—bare	1	W40067		260746	10778			
Fascia backing board	1	260744						
Fascia board with mouldings	1			271274	10778			
Floorboard—R/H	1	TD24		271268	22407			
Floorboard—L/H	1	TD23		260631	4237	271267	22407	
Scuttle masking board				271273	18883			
Foot-well	1			270649	4237			
CARPET DETAILS								
Carpet—R/H front	1	250382						
Carpet—L/H front	1	250381						Fin. at 4236
Carpet—L/H front	1			250464	4237			
Rubberized felt—front floor—R/H	1	MB50231						
Rubberized felt—front floor—L/H	1	MB50232						Fin. at 4236
Rubberized felt—front floor—L/H	1			250465	4237			
Rubber mat	1			270414	4237			
DASHBOARD AND BODY MOUNTING								
Retainer—fume excluder	1	136677						
Toeboard	1	136268						
Fume excluder—steering column	1	136679						
Dash masking board	1	TD26		271273	18883			
AMENDMENTS								

SECTION R

MARK II

SUPPLEMENT TO M.G. MIDGET (Series "TD")

DESCRIPTION	No. off per Car	Commencing Chassis No. TD0251		Part No.	Commencing Engine No.	Part No.	Commencing Chassis No.	REMARKS
		Part No.	Illus. No.					
ENGINE								
Packing plates—rocker brackets	4	AJJ192						Fin. at 17028
Flat washers—cylinder head nuts	10	AJJ605						
Valves—inlet	4	168426						
Valves—exhaust	4	AJJ193						
Spring—valve—outer	8	168428						
Spring—valve—inner	8	168429						
Sparking plug (L11S Champion)	4	97H573		168483	17029			
Carburetters—1½" dia. competition	1 pr.	A1385		300825	6180			
Pipe—flexible oil	2	AJJ196						Fin. at 17028
Float-chamber needle and seat assembly	2	AJJ649						
Jets—·100"	2	AUC2113						
Power unit c/w gearbox	1			XPAG/TD3				
Cylinder head (with valves and springs)	1			SA2203/11				
Cylinder head (studded, with valve guides)	1			SA2204/10				
Stud—manifold	4			X24172				
Push-rod cover tube	8			168463				
Retainer—valve cap	16			168374				
Exhaust manifold	1			SA2439/1				
Gasket—exhaust manifold	1			168433	17029			
Inlet manifold	1			SA2440/1				
Joint—carburetter to manifold	2			168436				
Carburetter pipe	1			168437				
Joint—carburetter pipe	2			168438				
Self-locking nut	1			31648				
Air cleaner	1			168388				
Stud—air cleaner	1			168439				
Distributor	1			168462				Fin. at Engine No. 26743
Distributor	1			168722	26744			
Stud—cylinder head cover	2			X21027				
Guide—valve—inlet	4			X22549				
Guide—valve—exhaust	4			X22551				
Cover-plate—rear	1			170082				
Joint—rear cover-plate	1			X22438				
Plug—oil hole	1			X15188				
Valve—inlet	4			168426				
Valve—exhaust	4			AJJ193				
Cap—valve spring—top	8			X22788				
Cap—valve spring—bottom	8			X24090	17029			
Deflector—oil	8			X24086				
Packing ring—valve	8			AEK113				
Carburetter assembly	1			AUC578				
Needle and seat T3	1			A1311/1				
Locknut—inlet manifold stud	1			X31214				
Washer—locknut	2			PWZ105				
Bolt—carburetter	4			LA7469				
Wing nut	1			WGN012				
High-compression piston	4			AJJ190				Other piston details as standard
Rings—compression	8			AJJ194				
Valves—exhaust—sodium-cooled	4			AJJ195				
Guides—exhaust valves	4			X24471				

AMENDMENTS

DESCRIPTION	No. off per Car	Commencing Chassis No. TD0251 Part No.	Commencing Chassis No. TD0251 Illus. No.	Part No.	Commencing Engine No.	Part No.	Commencing Chassis No.	REMARKS
Engine—*continued*								
Cotters—valves	8			SK957				
Carburetter (for Shorrocks supercharger)	1			A1395				
Vertical Magneto (4VRA)	1			27H5212	17029			
Gasket—cylinder head (laminated copper)	1			AJJ197				
Neoprene washer for carburetter	1			SK972				
CHASSIS								
Chassis frame **(RHD)**	1	500240						
Chassis frame **(LHD)**	1	500241						
Shock absorber—R/H front	1	500144						
Shock absorber—L/H front	1	500145						
Packing block	2	500148						
Bolt—3/8" BSF × 17" hex. head	4	AJD6315Z						
Plain nut—3/8" BSF hex.	4	AJD8106Z						
Spring washer—3/8" dia.	4	LWZ206						
Anchor bracket	2	500146						
Shock absorber—R/H rear	1	500149						
Shock absorber—L/H rear	1	500150						
Bracket—frame R/H	1	500151						
Bracket—frame L/H	1	500152						
Bolt—3/8" BSF × 1 1/4" hex. head	4	AJD6310Z						
Plain nut—3/8" BSF	4	AJD8106Z						
Spring washer—3/8" dia.	4	LWZ206						
Plate—rear spring	2	500153						If required
Coil (BR12)	1	3H2296						
Petrol pump complete with elbow nut and olive	1	AUA425						
Bracket—petrol pump	1	128355						
Rubber mounting	2	53626						
Retainer	1	53627						
Bolt—1/4" BSF × 1" hex. head	2	AJD6158Z						
Plain nut—1/4" BSF hex.	2	AJD8104Z						
Locknut—1/4" BSF hex.	2	AJD8204Z						
Bolt—1/4" BSF × 5/8" hex. head	2	AJD6155						
Spring washer—1/4" dia.	2	LWZ204						
Petrol pipe	2	54348						
(1 between carburetters)								
(1 adaptor to carburetters)								
Adaptor	1	81405						
Petrol pipe (pump to adaptor)	1	54693						
Clip (pipe to carburetter)	2	82149						
Ferrule (flange)	2	ACH8529						
Banjo	1	AUC1832						
Adaptor—tank	1	99612						
Petrol pipe (tank to pump)	1	135379						
Clip (pipe to frame)	5	95100						
Clip (pipe to bulkhead)	1	50232						
Screw—2 BA round head × 1/2"	1	AJD1204B						
Nut—2 BA hex. head	1	AJD8012Z						
Spring washer—3/16" dia.	1	LWN103						
Adaptor plate—air pipe	1	500341						
Bolt—carburetter	4	CA1095						
Bolt—air cleaner pipe	1	LA7469						Fin. at Engine No. 17028
Washer—air cleaner pipe	1	LA7281						
Hose—air cleaner pipe	2	X21425						
Clip—air cleaner pipe	2	X31197						

DESCRIPTION	No. off per Car	Commencing Chassis No. TD0251 Part No.	Illus. No.	Part No.	Commencing Engine No.	Part No.	Commencing Chassis No.	REMARKS
Chassis—*continued*								
Pipe—air cleaner	1	X24271						Fin. at Engine No. 17028
Lock washer—rocker bracket	4	X22916						
Pinion—speedometer	1	X24441						Fin. at 18958
Gear—speedometer	1	X24440						
Rear axle assembly—ratio 9/49	1	A2340				A2377	12285	
Crown wheel and pinion with bolts and pinion nuts	1 set	101593				102262		
Pinion—speedometer	1	X17212						
Gear—speedometer	1	X24442						
Speedometer	1					500829	18959	
Rear axle assembly—ratio 8/39	1	A2339				A2376	12285	
Crown wheel and pinion with bolts and pinion nuts	1 set	101910				102261		
Road wheels for 6·00 tyres	5	131904						
Competition clutch assembly—8"	1	AHH5457						
Driven plate—8"	1	MG862/99						
Clutch assembly complete with driven plate—7¼"	1	MG862/92						
Springs—pressure plate	6	162515						
Bonnet—complete assembly	1					500788	22613	
Bonnet—R/H side	1					500789		
Flash—bumper and bonnet	3					500812		
Plinth—rear bumper flash	1					500811		
Sleeve nut—flash to bumper	2					135804		
Grab rail—R/H facia **(LHD)**	1					500809		
Grab rail—L/H facia **(RHD)**	1					500810		
Radiator	1					500798		
False nose	1					AJJ119		
Case with nuts and washers	1					301503		
Medallion—M.G.	1					301504		
Grille	1					301505		
Nut	6					301021		
Wheel medallion	4					136340		
Spare wheel medallion	1					500183		
Bonnet rest—rubber	1 lth.	2470						
Support—bonnet hinge rod—outer	1	81810						
Support—bonnet hinge rod—inner	1	81811						
MANUAL IGNITION CONTROL								
Bracket—spring	1	X24202						
Spring	1	84495						
Ignition control lever and cable	1	SK998						
Control bracket	1	SK999						
Modification to engine breather pipe	1	SK1000						
Modification to distributor lever	1	SK1001						

AMENDMENTS

PRINTED IN ENGLAND BY THE NUFFIELD PRESS LIMITED, COWLEY, OXFORD, 27/11 (12246) 7/58—10m.

KEY TO PLATE A

Illus. No.	Description	Page No.
A1	Chassis frame complete	A.2
A2	Extension—front R/H—frame	A.2
A3	Extension—front L/H—frame	A.2
A4	Bracket—engine steady	A.2
A5	Bracket—engine mounting support	A.2
A6	Anchor—stay tube	A.2
A7	Bracket—frame stiffener—R/H	A.2
A8	Bracket—frame stiffener—L/H	A.2
A9	Bracket—engine mounting—rear	A.2
A10	Bracket—propeller shaft tunnel	A.2
A11	Bracket—exhaust pipe	A.2
A12	Bracket—exhaust pipe	A.2
A13	Bracket—centre—body mounting	A.2
A14	Bracket—front—rear spring—R/H	A.2
A15	Bracket—front—rear spring—L/H	A.2
A16	Bracket—rear—body mounting	A.2
A17	Bracket—rear—rear spring	A.2
A18	Mounting bracket—rear wing—R/H	A.2
A19	Mounting bracket—rear wing—L/H	A.2
A20	Mounting bracket—rear valance	A.2
A21	Stiffener bracket—R/H	A.2
A22	Stiffener bracket—L/H	A.2
A23	Stay tube assembly	A.2
A24	Fork end	A.2
A25	Dash stiffener assembly	A.2
A26	Gusset plate—dash stiffener	A.2
A27	Gusset plate—top—dash stiffener	A.2
A28	Steering knuckle—R/H	A.3
A29	Steering knuckle—L/H	A.3
A30	Swivel pin—R/H	A.3
A31	Swivel pin—L/H	A.3
A32	Link—swivel pin—upper R/H	A.3
A33	Link—swivel pin—upper L/H	A.3
A34	Plate—link	A.3
A35	Bush—link	A.3
A36	Link—swivel pin—lower R/H	A.3
A37	Link—swivel pin—lower L/H	A.3
A38	Seal—swivel pin	A.3
A39	Grease nipple ($\frac{5}{16}$" × 90°)—link	A.3
A40	Steering lever—R/H	A.3
A41	Steering lever—L/H	A.3
A42	Nut—Simmonds thin $\frac{1}{2}$" BSF	A.3
A43	Key—Woodruff No. 8	A.3
A44	Nut—steering knuckle—R/H	A.3
A45	Nut—steering knuckle—L/H	A.3
A46	Felt washer—hub	A.3
A47	Grease retainer—hub	A.3
A48	Bearing hub—inner	A.3
A49	Bearing hub—outer	A.3
A50	Distance piece—hub	A.3
A51	Distance washer—hub	A.3
A52	Oil seal—hub	A.3
A53	Hub and brake-drum assembly—R/H front	A.3
A54	Wheel stud	A.3
A55	Damper complete—front	A.4
A56	Bolt—wishbone to link	A.4
A57	Link—distance tube	A.4
A58	Thrust washer—link	A.4
A59	Seal—link	A.4
A60	Support—link seal	A.4
A61	Spring coil	A.4
A62	Spring pan assembly	A.4
A63	Bottom wishbone assembly	A.4
A64	Wishbone pivot	A.4
A65	Bolt—wishbone to link	A.4
A66	Spigot for spring	A.4
A67	Check rubber	A.4
A68	Bush—bottom wishbone	A.4
A69	Washer—wishbone	A.4
A70	Main leaf complete with bush	A.5
A71	Bush—Silentbloc	A.5
A72	Second leaf	A.5
A73	Third leaf	A.5
A74	Fourth leaf complete with clips	A.6
A75	Leaf clips	A.6

Illus. No.	Description	Page No.
A76	Distance tube	A.6
A77	Fifth leaf	A.6
A78	Sixth leaf	A.6
A79	Seventh leaf	A.6
A80	Rubber pad	A.6
A81	Rubber—spring clip	A.6
A82	Bolt—$\frac{1}{4}$" BSF	A.6
A83	Locating bolt	A.6
A84	Clip—rear spring	A.6
A85	Bracket—L/H—damper to rear spring	A.6
A86	Bracket—R/H—damper to rear spring	A.6
A87	Pin—rear spring front end	A.6
A88	Washer—Silentbloc	A.6
A89	Seating pad—rear spring	A.6
A90	Locating plate—rear spring	A.6
A91	Shackle plate	A.6
A92	Shackle pin	A.6
A93	Bush	A.6
A94	Damper complete—R/H	A.7
A95	Damper complete—L/H	A.7
A96	Radiator case (with medallion, grille, and false nose)	C.2
A97	Radiator false nose	C.2
A98	Medallion—M.G.—radiator	C.2
A99	Radiator grille	C.2
A100	Radiator film block complete (with tanks)	C.2
A101	Drain tap	C.2
A102	Filler cap—radiator	C.2
A103	Ring—rubber—filler cap	C.2
A104	Packing washer—radiator mounting	C.2
A105	Support member—radiator	C.2
A106	Stay tube—radiator—R/H	C.2
A107	Stay tube—radiator—L/H	C.2
A108	Yoke end—stay tube	C.2
A109	Hose—bottom—radiator	C.2
A110	Hose—top—radiator	C.2
A111	Clip—bottom hose	C.2
A112	Clip—top hose	C.2
A113	Drain pipe	C.2
A114	Exhaust system assembly	C.2
A115	Front pipe	C.2
A116	Silencer and rear pipe assembly	C.2
A117	Gasket—exhaust pipe flange	C.2
A118	Bracket—front support	C.2
A119	Support—tail pipe	C.2
A120	Petrol tank complete	C.3
A121	Drain plug—petrol tank	C.3
A122	Main feed adaptor	C.3
A123	Washer—drain plug and main feed	C.3
A124	Filler cap (Westwood) complete	C.3
A125	Trigger—cap	C.3
A126	End cover—petrol tank—L/H	C.3
A127	End cover—petrol tank—R/H	C.3
A128	Special bolt—tank end cover	C.3
A129	Pipe (between carburetters)	C.3
A130	Pipe—tank to pump—complete with washer and union washer	C.3
A131	Mounting bracket	C.3
A132	Rubber for mounting bracket	C.3
A133	Strap—petrol tank	C.3
A134	Packing—tank strap	C.3
A135	Rubber packing—tank to frame	C.3
A136	Pipe—pump to carburetters	C.3
A137	Petrol pump	J.2
A138	Elbow—petrol pump	J.2
A139	Check strap assembly—rear axle	A.5
A140	Check strap	A.5
A141	Buffer—check strap	A.5
A142	Rebound rubber—rear axle	A.5
A143	Spare wheel carrier bracket assembly	L.4
A144	Clamp bracket—lower—carrier	L.4
A145	Plug—spare wheel carrier	L.4
A146	Clamp—rear number-plate	L.2
A147	Mounting bracket—rear number-plate	L.2

THE MG MIDGET (SERIES "TD")

CHASSIS AND RADIATOR DETAILS

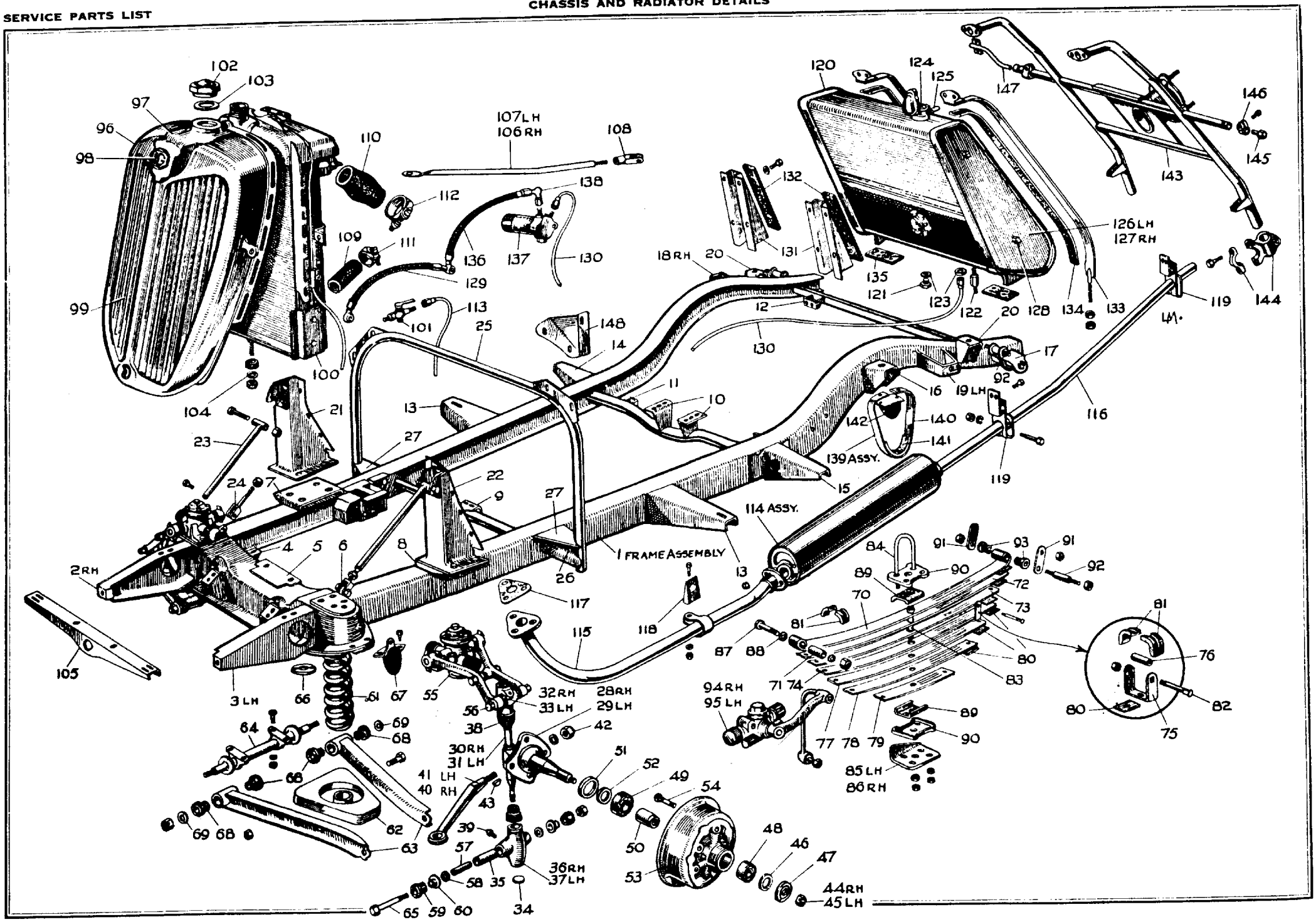

KEY TO PLATE B

Illus. No.	Description	Page No.
B1	Axle tube assembly—R/H	A.4
B2	Stud-cover	A.4
B3	Nut—axle cover stud	A.4
B4	Joint	A.4
B5	Drain plug	A.5
B6	Oil filler plug	A.5
B7	Axle tube assembly—L/H	A.4
B8	Cage—differential	A.4
B9	Gear—differential	A.4
B10	Washer—gear	A.4
B11	Pinion—differential	A.4
B12	Washer—pinion	A.4
B14	Pin—pinion	A.4
B15	Locking bolt—pinion pin	A.4
B16	Tab washer—locking bolt	A.4
B17	Bearing—differential	A.4
B18	Distance collar—bearing	A.4
B19	Crown wheel and pinion	A.5
B20	Bolt—crown wheel	A.5
B21	Locking tab—crown wheel bolt	A.5
B22	Distance washer—pinion—rear	A.5
B23	Bearing and spacer assembly	A.5
B24	Oil seal—pinion—front	A.5
B25	Flange—universal joint	A.5
B26	Castle nut—pinion	A.5
B27	Washer—castle nut	A.5

Illus. No.	Description	Page No.
B28	Rear axle shaft	A.5
B29	Nut—axle shaft	A.5
B30	Washer—axle shaft nut	A.5
B31	Bearing—rear hub	A.5
B32	Distance washer—hub bearing	A.5
B33	Oil seal—hub	A.5
B34	Collar—oil seal	A.5
B35	Support—brake plate	A.5
B36	Bolt for support	A.5
B37	Nut—⅜" B.S.F. (Phillidas)	A.5
B38	Hub and brake drum assembly	A.5
B39	Wheel stud	A.5
B40	Nut—wheel stud	A.5
B49	Tubular shaft assembly	A.6
B50	Flange yoke	A.6
B51	Sleeve yoke assembly	A.6
B52	Journal assembly (less greaser)	A.6
B53	Gasket—journal	A.6
B54	Retainer—gasket	A.6
B55	Needle bearing assembly	A.6
B56	Snap ring	A.6
B57	Grease nipple	A.6
B58	Dust cap	A.6
B59	Steel washer	A.6
B60	Cork washer	A.6
B61	Grease nipple (⅛" gas)	A.6

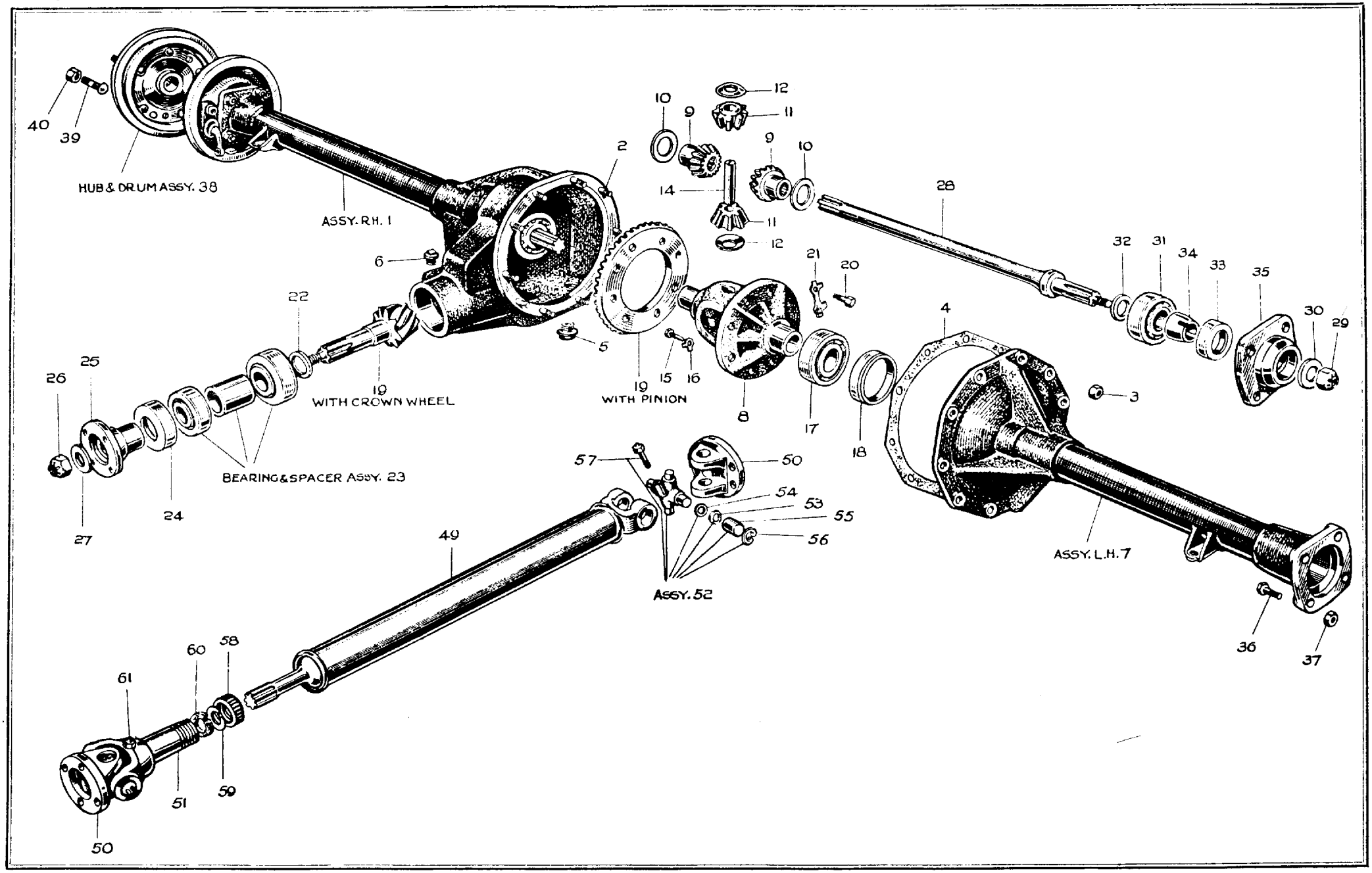
40
39
HUB & DRUM ASSY. 38
ASSY. R.H. 1
2
6
22
26
25
27
24
19
WITH CROWN WHEEL
BEARING & SPACER ASSY. 23
5
10
9
12
11
14
11
12
9
10
28
21
20
19
WITH PINION
15
16
8
17
18
4
3
32
31
34
33
35
30
29
57
50
54
53
55
56
ASSY. 52
49
ASSY. L.H. 7
36
37
61
60
58
51
59
50

KEY TO PLATE C

Illus. No.	Description	Page No.
C1	Rack housing—steering	B.2
C2	Rack—steering	B.2
C3	Pinion—steering	B.2
C4	Thrust washer—top—pinion	B.2
C5	Shim (·005″ thick)—tail bearing	B.2
C6	Shim (·007″ thick)—tail bearing	B.2
C7	Thrust washer—bottom pinion	B.2
C8	Seal—pinion	B.2
C9	Tail bearing—pinion	B.2
C10	Flange—pinion	B.2
C11	Damper pad—rack	B.2
C12	Housing—damper pad	B.2
C13	Spring—damper—pad	B.2
C14	Shim (·003″)—damper pad housing	B.2
C15	Shim (·020″)—damper pad housing	B.2
C16	Tie-rod	B.2
C17	Locknut for tie-rod	B.2
C18	Ball housing—male	B.2
C19	Ball housing—female	B.2
C20	Ball seat	B.2
C21	Shim—ball seat adjuster (·003″)	B.2
C22	Shim—ball seat adjuster (·005″)	B.2
C23	Ball socket assembly—outer	B.2
C24	Cap—inner—grease retaining	B.2
C25	Cap—outer—grease retaining	B.2
C26	Pressure ring—for caps	B.2
C27	Lock washer—ball housing—inner	B.2
C28	Seal—ball joint	B.2
C29	Clip—large	B.2
C30	Clip—small	B.2

Illus. No.	Description	Page No.
C31	Grease nipple ($\frac{5}{16}$″ straight)—rack housing	B.2
C32	Grease nipple ($\frac{5}{16}$″ × 90°)—steering arm	B.2
C33	Adjustable top end	B.2
C34	Key—steering wheel	B.2
C35	Key—connector	B.2
C36	Spring cover	B.2
C37	Cover cup	B.2
C38	Clamp—steering column	B.2
C39	Bolt—clamp	B.2
C40	Nut—clamp bolt	B.2
C41	Washer—clamp bolt	B.2
C42	Plate—bottom bush	B.2
C43	Bush—top	B.2
C44	Bush—bottom	B.2
C45	Inner column—welded—complete	B.2
C46	Outer column	B.2
C47	Bolt—column flange to box flange	B.2
C48	Washer—column flange bolt	B.2
C49	Rubber bearing—column	B.2
C50	Support bracket—top	B.2
C51	Clamp—steering column	B.2
C52	Distance tube—column adjustment	B.2
C53	Steering wheel	B.2
C54	Nut—steering wheel	B.2
C55	Distance-piece—steering column clamp	B.2
C56	Decorative horn push and steering column head assembly	B.2
C57	Clip—steering column steady	B.2
C58	Distance tube—long	B.2
C59	Distance tube—short	B.2

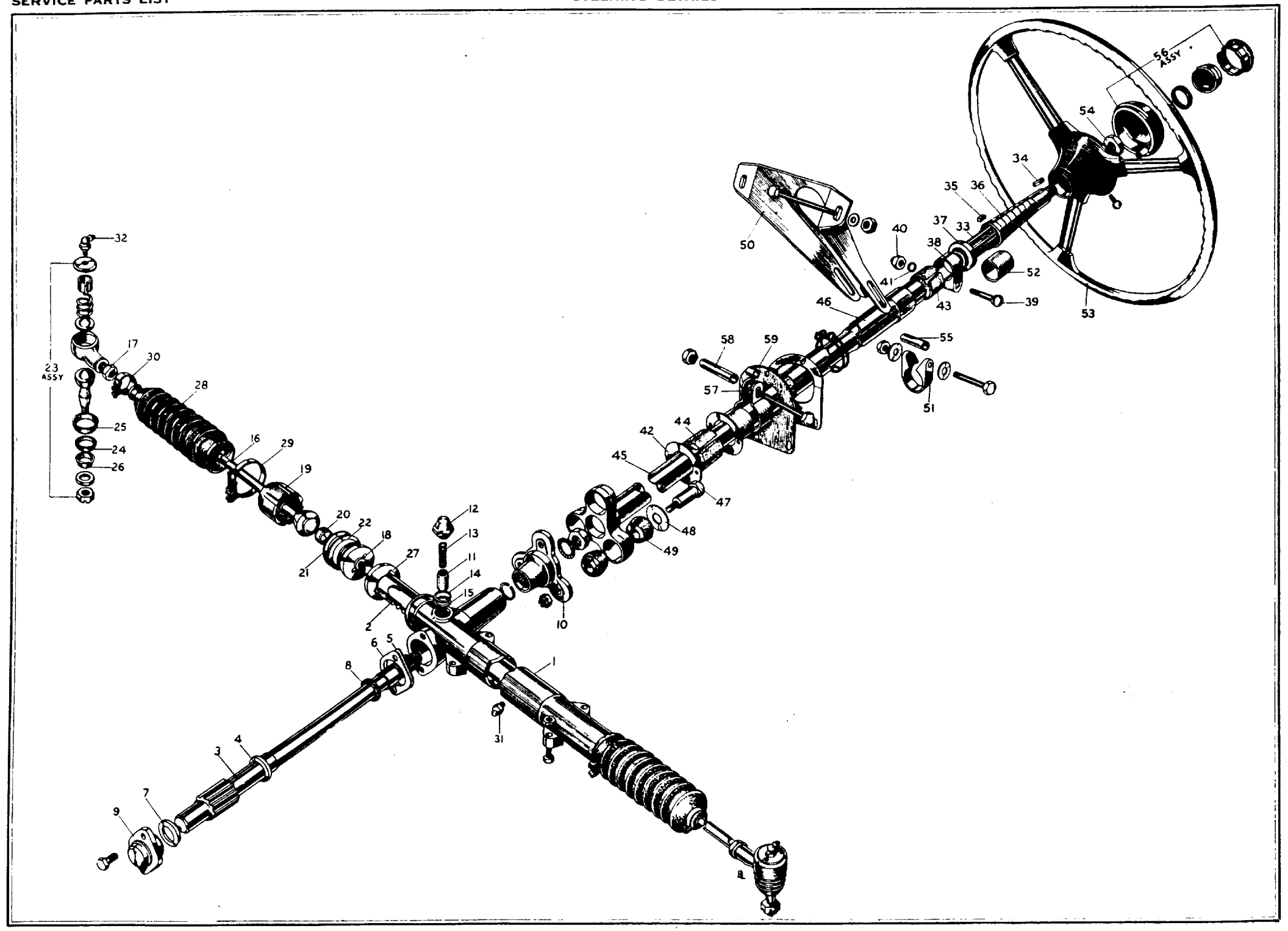
56 ASSY
54
34
35
36
37
33
38
40
50
52
41
39
46
43
53
58
59
55
57
51
44
42
45
47
48
49
32
17
30
23 ASSY
28
25
24
26
16
29
19
20
22
18
21
27
12
13
11
14
15
10
2
6
5
8
1
31
4
3
7
9

KEY TO PLATE D

Illus. No.	Description	Page No.
D1	Brake pedal and bush	D.2
D2	Pad—rubber—brake pedal	D.2
D3	Pad—brake pedal	D.2
D4	Return spring—brake pedal	D.2
D5	Pin—brake pedal	D.2
D6	Fork end master cylinder	D.2
D7	Master cylinder and tank assembly	E.2
D8	Drain plug	E.2
D9	Gasket—drain plug	E.2
D10	Valve assembly	E.2
D11	Cup—valve	E.2
D12	Washer—valve	E.2
D13	Spring (with retainer)—piston return	E.2
D14	Cup—piston	E.2
D15	Piston—master cylinder	E.2
D16	Cup—piston secondary	E.2
D17	Stop—piston	E.2
D18	Circlip—stop	E.2
D19	Boot—master cylinder	E.2
D20	Push-rod—master cylinder	E.2
D21	Filler plug assembly	E.2
D22	Gasket—filler plug	E.2
D23	Adaptor—master cylinder	E.2
D24	Gasket—master cylinder	E.2

Illus. No.	Description	Page No.
D25	Hose assembly	E.2
D26	Four-way piece	E.2
D27	Three-way piece	E.2
D28	Lock washer	E.2
D29	Locknut—hose	E.2
D30	Pipe (master cylinder to 4-way)	E.2
D31	Pipe (4-way to 3-way)	E.2
D32	Pipe (front 3-way to R/H front hose pipe)	E.2
D33	Pipe (front 3-way to L/H front hose)	E.2
D34	Pipe (4-way to rear hose)	E.2
D35	Pipe (axle hose bracket to R/H rear)	E.2
D36	Pipe (axle hose bracket to L/H rear)	E.3
D37	Mask—shoe adjuster	E.3
D38	Adjuster—brake-shoe	E.3
D39	Body with studs and abutment	E.3
D40	Piston and dust cover assembly	E.3
D41	Cup—piston	E.3
D42	Cup filler	E.3
D43	Banjo connection—forward R/H	E.3
D44	Banjo connection—forward L/H	E.3
D45	Bolt—connection	E.3
D46	Bleeder screw	E.3
D47	Gasket—banjo bolt—small	E.3
D48	Gasket—banjo bolt—large	E.3

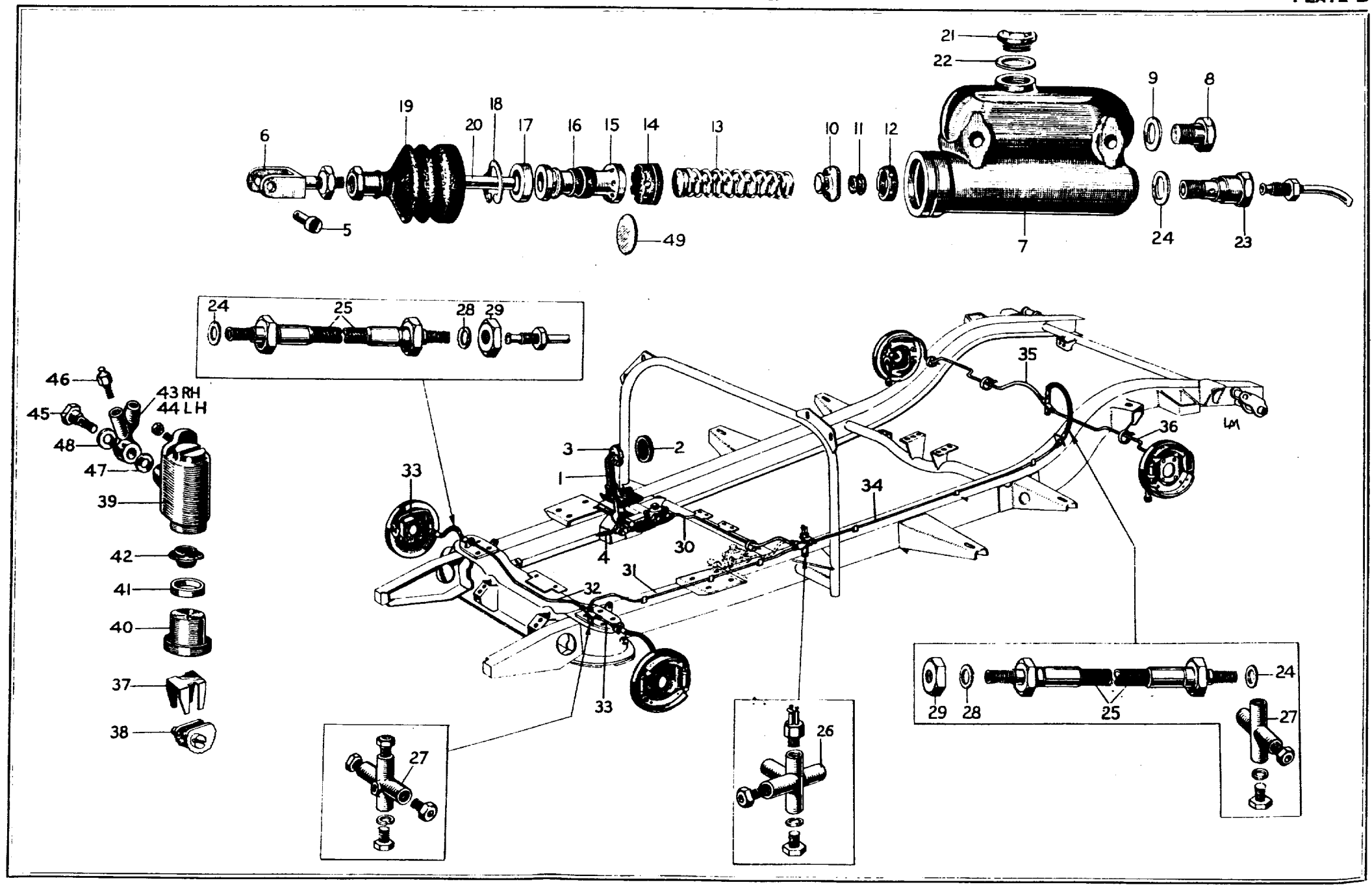
21
22
9
8
19
18
20
17
16
15
14
13
10
11
12
6
5
49
7
24
23
24
25
28
29
46
43 RH
44 LH
45
48
47
39
42
41
40
37
38
3
2
1
33
4
30
31
32
33
34
35
36
LM
27
26
29
28
25
24
27

KEY TO PLATE E

Illus. No.	Description	Page No.
E1	Brake gear (front axle) back plate assembly —R/H	E.3
E2	Brake gear (front axle) back plate assembly —L/H	E.3
E3	Spring—shoe pull-off	E.3
E4	Front brake-shoe—lined—complete	E.3
E5	Banjo connections	E.3
E6	Bolt—connection	E.3
E7	Gasket—banjo bolt—small	E.3
E8	Gasket—banjo bolt—large	E.3
E9	Brake gear (rear axle) back plate assembly —R/H	E.4
E10	Brake gear (rear axle) back plate assembly —L/H	E.4
E11	Spring—shoe tension	E.4
E12	Mask—shoe adjuster	E.4
E13	Adjuster—brake-shoe	E.4
E14	Rear brake-shoe—lined—complete	E.4
E15	Body and abutment strip	E.4
E16	Piston and dust cover	E.4
E17	Piston (hydraulic)	E.4
E18	Cup piston	E.4

Illus. No.	Description	Page No.
E19	Cup filler	E.4
E20	Boot—wheel cylinder	E.4
E21	Hand brake lever	E.4
E22	Pivot pin—hand brake lever	E.4
E23	Lever assembly	E.4
E24	Ratchet assembly	E.4
E25	Hand brake pawl	E.4
E26	Pawl rod—hand brake	E.4
E27	Hand grip	E.4
E28	Bush for rod	E.4
E29	Spring—lever knob	E.4
E30	Washer—spring	E.4
E31	Knob—pawl rod	E.4
E32	Fulcrum pin	E.4
E33	Washer—fulcrum pin	E.4
E34	Trunnion—hand brake	E.4
E35	Twin cable abutment	E.4
E36	Adjuster nut—brake cable	E.4
E37	Cable—hand brake	E.4
E38	Clevis pin	E.4
E39	Wheel stud	A.3
E40	Nut—wheel stud	A.3

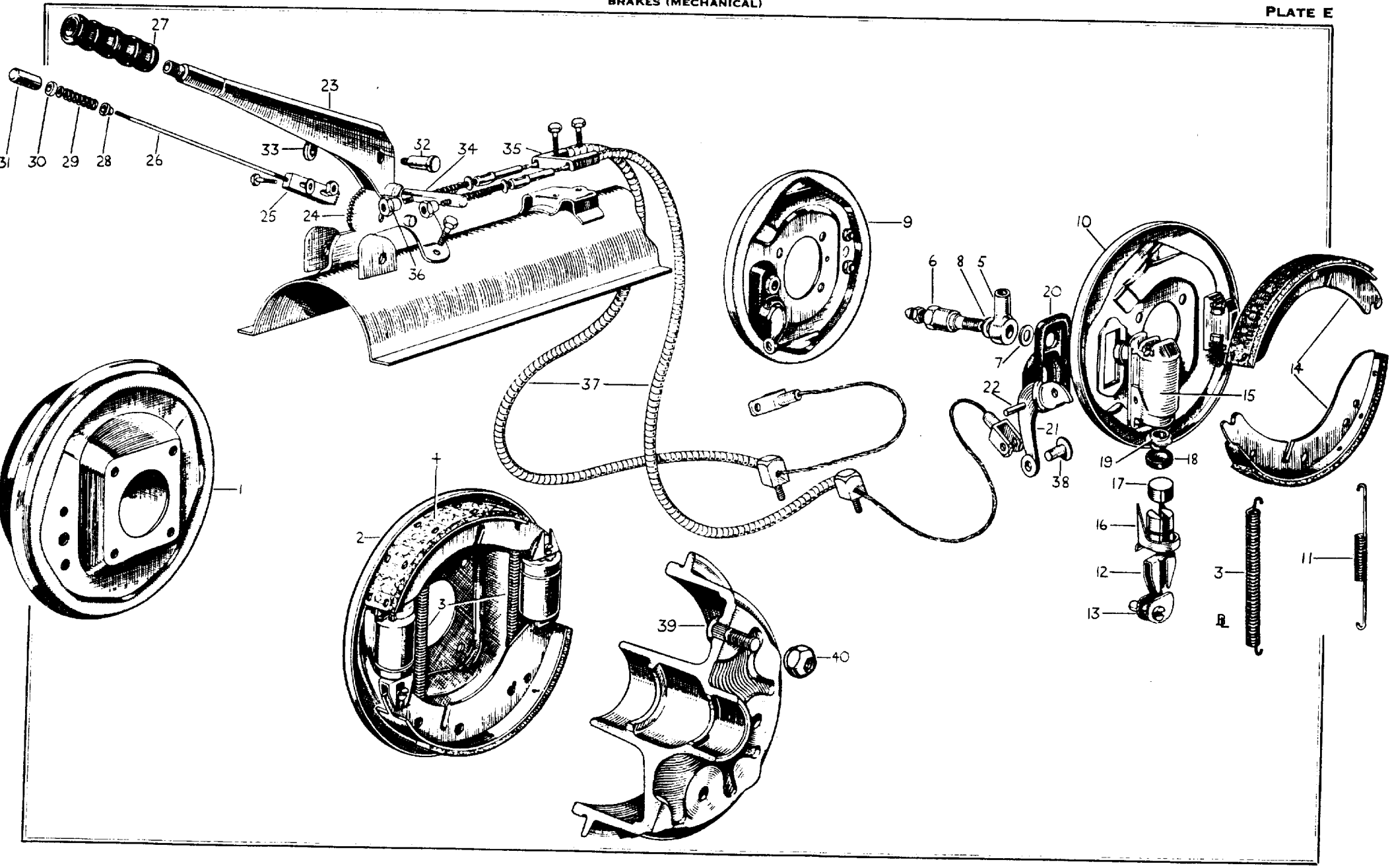
27
23
31
30
29
28
26
33
32
34
35
25
24
36
37
9
10
6
8
5
20
7
22
21
38
19
18
17
16
12
13
15
14
1
2
3
4
39
40
3
11

KEY TO PLATE F

Illus. No.	Description	Page No.
F1	Mounting rubber—engine—front	F.2
F2	Engine control link (L/H thread)	F.2
F3	Cup—link	F.2
F4	Link cup rubber	F.2
F5	Adjuster	F.2
F6	Engine control bracket	F.2
F7	Cylinder block complete	F.2
F8	Plug—oil feed hole	F.2
F9	Plug—oil hole—by-pass	F.2
F10	Oil seal cover	F.2
F11	Gasket—oil seal cover	F.2
F12	Bolt—cover	F.2
F13	Studs—cylinder head	F.2
F14	Water drain tap	F.2
F15	Washer—drain tap	F.2
F16	Stud—tappet cover	F.2
F17	Tappet inspection cover	F.3
F18	Joint—cover	F.3
F19	Nut—cover stud	F.3
F20	Washer—cover stud	F.3
F21	Breather pipe	F.3
F22	Bracket—breather pipe	F.3
F23	Bolt—breather pipe bracket	F.3
F24	Nut—breather pipe bracket	F.3
F25	Clip—breather pipe	F.3
F26	Bolt—breather pipe clip	F.3
F27	Nut—clip bolt	F.3
F28	Spring—oil filter—by-pass	F.3
F29	Ball—oil filter—by-pass	F.3
F30	Guide—ball	F.3
F31	Seat—ball	F.3
F32	Timing chaincase assembly	F.3
F33	Packing—chaincase	F.3
F34	Joint—chaincase to plate	F.3
F35	Bolt—long—chaincase to block	F.3
F36	Bolt—short—chaincase to block	F.3
F37	Bearer plate—front	F.3
F38	Joint—plate to block	F.3
F39	Bolt—plate to case	F.3
F40	Bolt—plate to block	F.3
F41	Bracket—plate	F.3
F42	Bolt—bracket	F.3
F43	Nut	F.3
F44	Spring washer	F.3
F45	Cylinder head (studded) with guides	F.5
F46	Stud—cover	F.5
F47	Stud—manifold	F.5
F48	Rear cover—cylinder head	F.6
F49	Joint—rear cover-plate	F.6
F50	Screw—rear cover-plate	F.6
F51	Water outlet pipe (studded)	F.6
F52	Stud—thermostat	F.6
F53	Bolt—water outlet pipe	F.6
F54	Joint—water outlet pipe	F.6
F55	Gasket—cylinder head	F.6
F56	Nut—securing cylinder head	F.6
F57	Cylinder head cover assembly	F.6
F58	Oil filler cap	F.6
F59	Joint—cylinder head cover	F.6
F60	Nut—cylinder head cover	F.6
F61	Washer—cylinder head cover	F.6
F62	Stud—exhaust manifold flange	F.6
F63	Nut—stud	F.6
F64	Joint—exhaust manifold	F.6
F65	Clamp—exhaust manifold	F.6
F66	Nut—exhaust manifold clamp	F.6
F67	Oil sump	G.2
F68	Drain plug—sump	G.2
F69	Washer—drain plug	G.2

Illus. No.	Description	Page No.
F70	Plug—oil hole	G.2
F71	Packing	G.2
F72	Joint—sump to block	G.2
F73	Bolt—sump—front	G.2
F74	Bolt—sump—short	G.2
F75	Bolt—sump—long	G.2
F76	Dipstick	G.2
F77	Suction filter assembly	G.2
F78	Filter gauze	G.2
F79	Spring—oil suction pipe	G.2
F80	Fibre washer	G.2
F81	Washer	G.2
F82	Joint—flange	G.2
F83	Bolt	G.2
F84	Oil pipe assembly—pump to filter	G.2
F85	Oil pump assembly—filter to block	G.2
F86	Bolt—banjo	G.2
F87	Washer—small	G.2
F88	Washer—large	G.2
F89	Oil filter	G.2
F90	Support bracket for oil filter	G.2
F91	Bolt—bracket	G.2
F92	Strap—oil filter bracket	G.2
F93	Bolt—strap	G.2
F94	Oil pump—bushed	G.2
F95	Bush—oil pump—body	G.2
F96	Oil pump cover with valve seat	G.2
F97	Bolt—cover—long	G.3
F98	Bolt—cover—medium	G.3
F99	Bolt—cover—short	G.3
F100	Lock washer	G.3
F101	Oil pump shaft and gear	G.3
F102	Gear—driving	G.3
F103	Key—driving gear	G.3
F104	Circlip—driving gear	G.3
F105	Oil pump gear (driven) with bush	G.3
F106	Bush—oil pump gear	G.3
F107	Spindle—driven gear	G.3
F108	Guide—relief valve ball	G.3
F109	Relief valve ball	G.3
F110	Spring—relief valve	G.3
F111	Cover plug—relief valve	G.3
F112	Washer—cover plug	G.3
F113	Joint—oil pump body	G.3
F114	Oil pipe—gallery to head	G.3
F115	Screw—banjo to head	G.3
F116	Screw—banjo to block	G.3
F117	Washer—screw	G.3
F118	Bracket—engine control link	G.4
F119	Engine control link (R/H thread)	G.4
F120	Rubber bush	G.4
F121	Cup washer	G.4
F122	Air cleaner	J.2
F123	Clip—air cleaner	J.2
F124	Wing nut—air cleaner stud	J.2
F125	Breather hose—air cleaner	J.2
F126	Clip—breather hose	J.2
F127	Pipe to air cleaner	J.2
F128	Joint—pipe to carburetter	J.2
F129	Bracket—dynamo	K.2
F130	Bolt—dynamo bracket	K.2
F131	Swivel bolt—short—dynamo	K.2
F132	Adjusting link	K.2
F133	Bolt—link	K.2
F134	Nut—swivel bolt	K.2
F135	Pulley—dynamo	K.2
F136	Flexible connection—oil gauge	K.3
F137	Connector—oil pipe	K.4

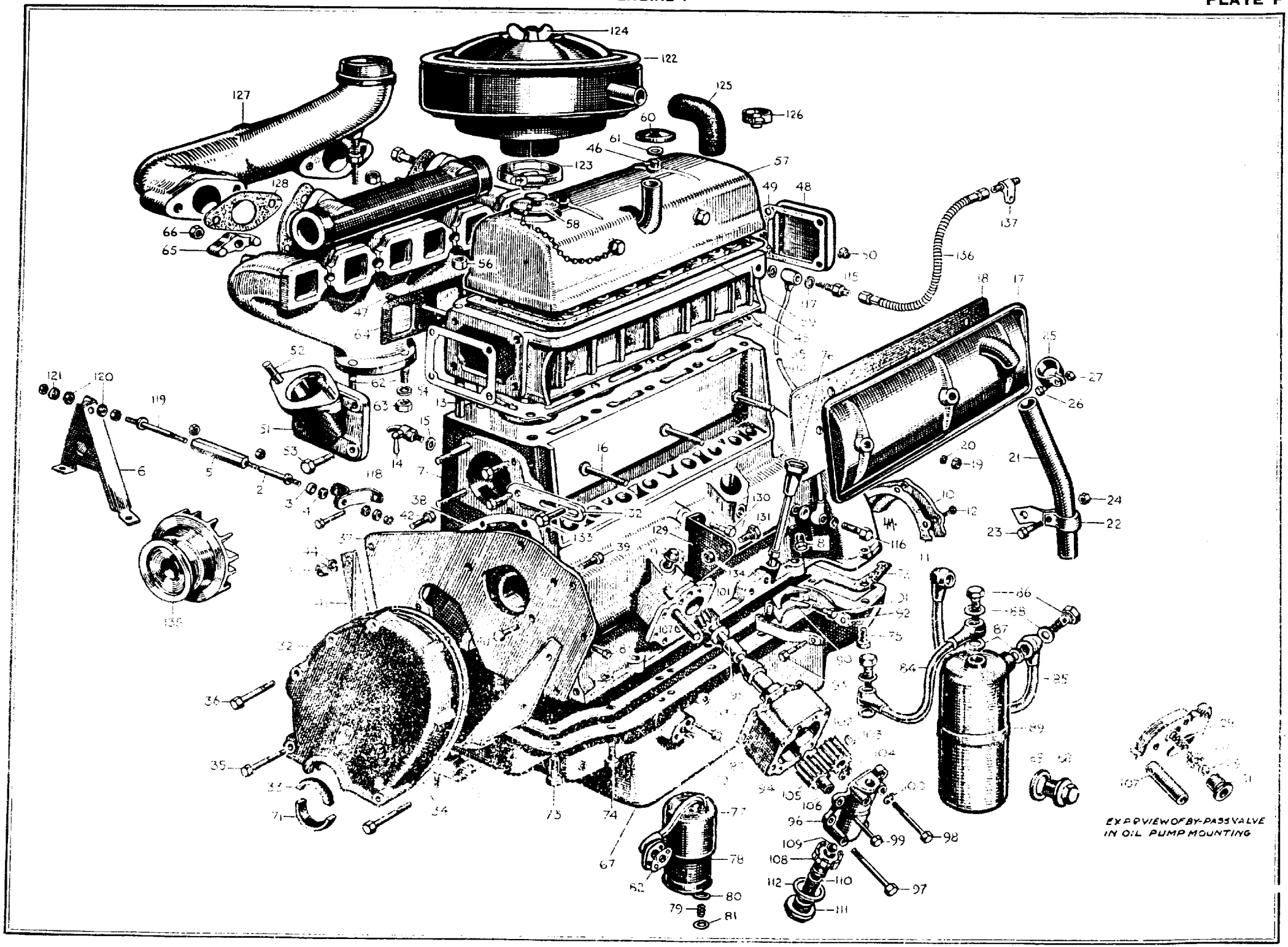
EXP. VIEW OF BY-PASS VALVE IN OIL PUMP MOUNTING

KEY TO PLATE G

Illus. No.	Description	Page No.
G1	Rear engine bearer bracket	F.2
G2	Support rubber	F.2
G3	Fork end	F.2
G4	Engine rebound rubber	F.2
G5	Clevis pin—fork end	F.2
G6	Washer	F.2
G7	Gearbox casing (with studs)	H.2
G8	Stud—gearbox top cover	H.2
G9	Stud—speedometer casing—medium	H.2
G10	Stud—speedometer casing—long	H.2
G11	Stud—speedometer casing—short	H.2
G12	Plug—oil drain	H.2
G13	Washer—drain plug	H.2
G14	Oil level indicator	H.2
G15	Mainshaft	H.2
G16	Mainshaft bearing	H.2
G17	Circlip—mainshaft bearing	H.2
G18	Guard—bearing—first motion shaft	H.3
G19	Plate guard	H.3
G20	Spring plate—guard	H.3
G21	Striking dog	H.3
G22	Sliding hub assembly (top and third)	H.3
G23	Spring—sliding hub	H.3
G24	Ball—spring	H.3
G25	Third speed gear	H.3
G26	Rollers—third speed gear	H.3
G27	Collar—third speed gear	H.3
G28	Plunger—third speed gear	H.3
G29	Spring—plunger	H.3
G30	Second speed gear	H.3
G31	Rollers—second speed gear	H.3
G32	Washer—second speed gear	H.3
G33	Collar—second speed gear	H.3
G34	Plunger—second speed gear	H.3
G35	Spring plunger	H.3
G36	Sliding hub (first and second)	H.3
G37	First speed gear	H.3
G38	Spring—first speed gear	H.3
G39	Ball—spring	H.3
G40	Circlip	H.3
G41	Distance-piece	H.3
G42	Layshaft	H.3
G43	Gear unit—layshaft	H.3
G44	Rollers—layshaft gear unit	H.3
G45	Spacer—layshaft gear unit	H.3
G46	Washer—layshaft	H.3
G47	Thrust washer—front	H.3
G48	Thrust washer—rear	H.3
G49	Bearing plate—front	H.3
G50	Bearing plate—rear	H.3
G51	Screw	H.3
G52	First motion shaft	H.3
G53	Bearing—first motion shaft	H.3
G54	Circlip—first motion shaft	H.3
G55	Guard—bearing—first motion shaft	H.3
G56	Nut—first motion shaft bearing	H.3
G57	Lock washer—bearing	H.3
G58	Spigot bearing rollers	H.3
G59	Oil seal—first motion shaft	H.3
G60	Reverse gear (with bush)	H.3
G61	Shaft—reverse gear	H.3
G62	Plug—reverse shaft	H.3
G63	Screw—reverse shaft	H.3
G64	Top and third gear selector	H.3
G65	Locating screw—selector	H.3
G66	Top and third gear shifter	H.3

Illus. No.	Description	Page No.
G67	Locating screw—shifter	H.3
G68	Distance tube—top and third	H.4
G69	Shaft—top and third shifter	H.4
G70	First and second gear shifter	H.4
G71	Locating screw	H.4
G72	First and second gear selector	H.4
G73	Locating screw	H.4
G74	Shaft—first and second shifter	H.4
G75	Stop—shaft	H.4
G76	Locating screw—stop	H.4
G77	Reverse gear selector	H.4
G78	Plunger—reverse gear selector	H.4
G79	Spring—plunger	H.4
G80	Ball—reverse plunger	H.4
G81	Spring—ball	H.4
G82	Locating screw	H.4
G83	Shaft—reverse selector	H.4
G84	Steady—reverse selector shaft	H.4
G85	Locating screw—steady	H.4
G86	Gear shifter reverse—upper	H.4
G87	Gear shifter reverse—lower	H.4
G88	Shaft—reverse gear shifter	H.4
G89	Locating screw—shaft	H.4
G90	Reverse link assembly	H.4
G91	Fulcrum pin—link	H.4
G92	Nut—fulcrum pin	H.4
G93	Washer—fulcrum pin	H.4
G94	Ball—shaft	H.4
G95	Spring—shifter shaft	H.4
G96	Gearbox cover	H.4
G97	Gasket—cover	H.4
G98	Nut—cover	H.4
G99	Filler plug—gearbox	H.4
G100	Washer for plug	H.4
G101	Rear casing	H.4
G102	Nut—rear casing	H.4
G103	Ball bearing	H.4
G104	Guard	H.4
G105	Oil retaining washer	H.4
G106	Hole plug—reverse light	H.4
G107	Speedometer gear	H.4
G108	Speedometer pinion	H.4
G109	Bearing—pinion	H.4
G110	Screw—pinion bearing	H.4
G111	Flange—universal joint	H.4
G112	Washer—flange	H.4
G113	Nut—flange to mainshaft	H.4
G114	Remote control cover	H.4
G115	Gasket—cover	H.5
G116	Cover bolt to rear casing	H.5
G117	Housing cover plunger	H.5
G118	Plug—operating shaft	H.5
G119	Spring—operating shaft	H.5
G120	Remote control shaft	H.5
G121	Selector lever—front	H.5
G122	Selector lever—rear	H.5
G123	Ball—lever	H.5
G124	Key—actuating shaft and selector levers	H.5
G125	Bolt—actuating shaft and selector levers	H.5
G126	Change speed lever	H.5
G127	Knob—change speed lever	H.5
G128	Cover—lever	H.5
G129	Spring—anti-rattle change speed lever	H.5
G130	Circlip—cover	H.5
G131	Circlip—shaft	H.4

THE MG MIDGET (SERIES "TD")

GEARBOX

PLATE G

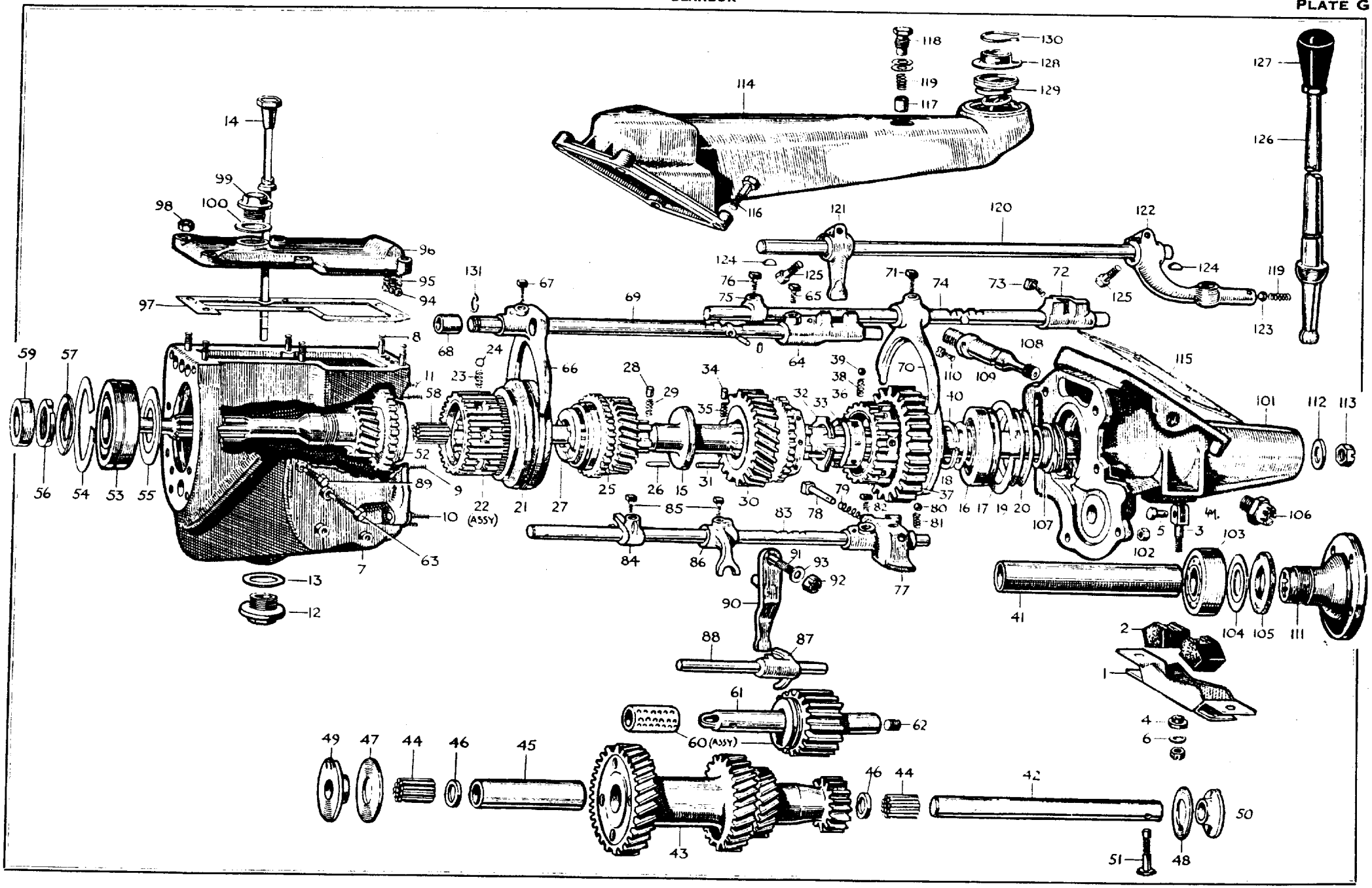

KEY TO PLATE H

Illus. No.	Description	Page No.
H1	Clutch pedal and bush	D.2
H2	Pad—rubber—clutch pedal	D.2
H3	Pad—brake pedal	D.2
H4	Bolt—pad—brake pedal	D.2
H5	Nut—pad bolt	D.2
H6	Shaft—clutch	D.2
H7	Seager circlip	D.2
H8	Spacing washer between pedals	D.2
H9	Bush—brake pedal	D.2
H10	Clutch cable assembly	D.2
H11	Nut—clutch adjuster	D.2
H12	Pin—clutch adjuster	D.2
H13	Connecting rod—clutch	D.2
H14	Yoke pin—rod	D.2
H15	Spring—clutch return	D.2
H16	Pin—clutch lever	D.2
H17	Dowel—clutch housing	F.2
H18	Flywheel (with starter ring and dowels)	F.4
H19	Dowel—clutch cover	F.4
H20	Dowel—crankshaft	F.4
H21	Bracket—clutch return spring	G.2
H22	Bolt—bracket	G.2
H23	Spring washer—bolt	G.2
H24	Lever—cable and connecting rod	G.2
H25	Bush—lever	G.2
H26	Fulcrum pin—lever	G.2
H27	Nut—fulcrum pin	G.2
H28	Washer—fulcrum pin	G.2
H29	Washer—fulcrum pin—outer	G.2
H30	Abutment bracket—clutch cable	G.2
H31	Bolt—bracket	G.2

Illus. No.	Description	Page No.
H32	Cover—clutch	H.2
H33	Release lever—clutch	H.2
H34	Eye-bolt and nut	H.2
H35	Fulcrum pin—release lever	H.2
H36	Strut—release lever	H.2
H37	Spring—anti-rattle—release lever	H.2
H38	Spring—retaining—release lever	H.2
H39	Plate—release lever	H.2
H40	Spring—pressure plate	H.2
H41	Pressure plate—clutch	H.2
H42	Clutch release bearing and cup assembly	H.2
H43	Retainer—clutch release bearing	H.2
H44	Clutch driven plate assembly	H.2
H45	Rivet—clutch driven plate	H.2
H46	Facing	H.2
H47	Bolt—clutch cover	H.2
H48	Clutch withdrawal shaft	H.2
H49	Circlip—withdrawal shaft	H.2
H50	Fork—clutch	H.2
H51	Key—clutch fork	H.2
H52	Taper pin—clutch fork	H.2
H53	Clutch operating lever	H.2
H54	Key—clutch lever	H.2
H55	Taper pin—clutch lever	H.2
H56	Clutch housing (with bushes)	H.2
H57	Bush—clutch housing	H.2
H58	Bolt—securing clutch housing	H.2
H59	Clutch inspection cover	H.2
H60	Screw—inspection cover	H.2
H61	Bolt—flywheel securing	H.4

CLUTCH DETAILS

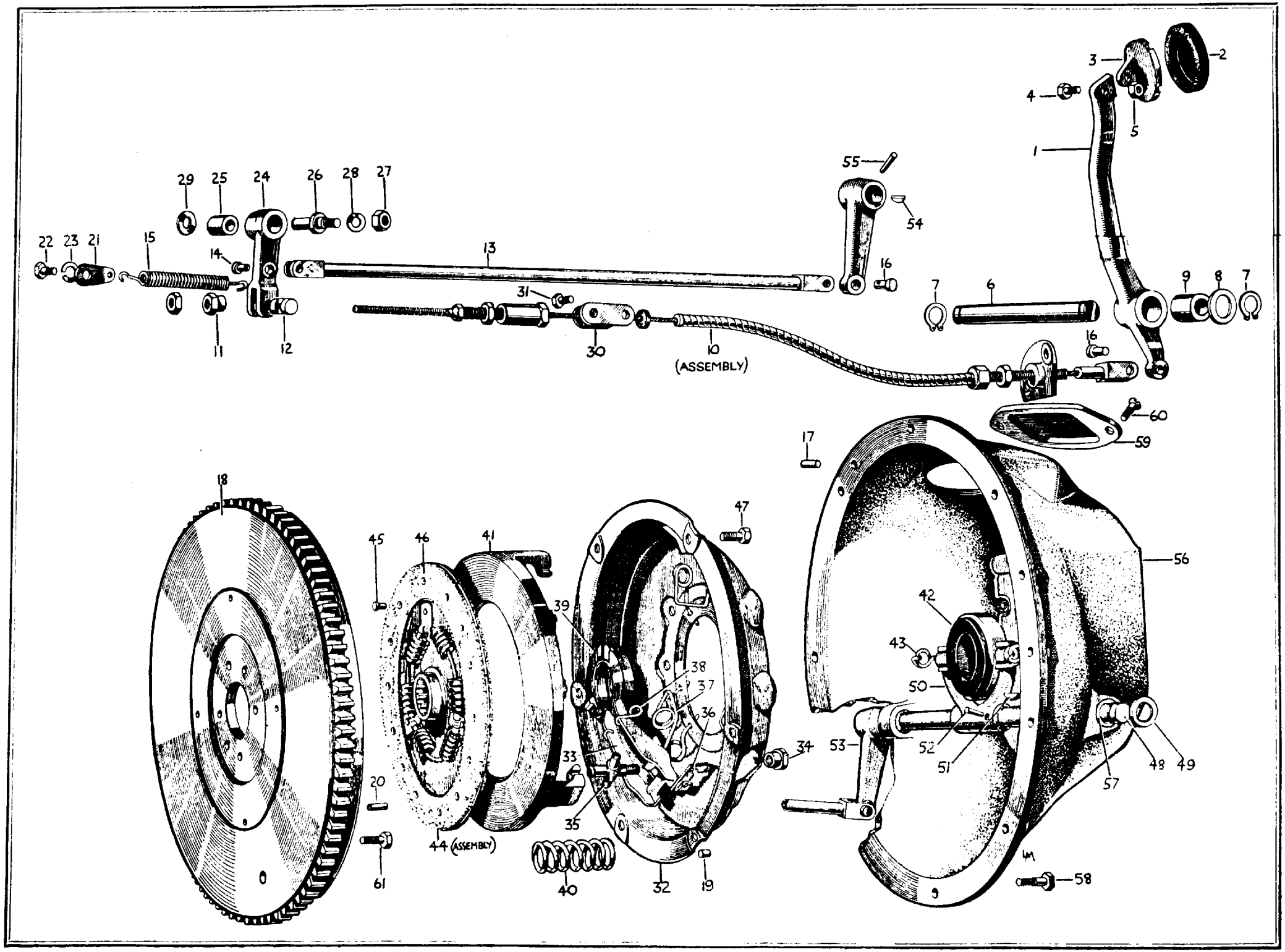

KEY TO PLATE J

Illus. No.	Description	Page No.
J1	Main bearing cap—front	F.2
J2	Main bearing cap—centre	F.2
J3	Main bearing cap—rear	F.2
J4	Pipe—rear cap	F.2
J5	Nuts—bearing cap	F.2
J6	Tensioner—chain	F.3
J7	Feed block—tensioner	F.3
J8	Bolt—feed block	F.3
J9	Spring—tensioner	F.3
J10	Piston complete (with rings and gudgeon pins)	F.4
J11	Piston ring—compression	F.4
J12	Piston ring—oil control	F.4
J13	Gudgeon pin	F.4
J14	Connecting rod with caps and bolts	F.4
J15	Bolt—connecting rod cap	F.4
J16	Nut—connecting rod cap bolt	F.4
J17	Clamp screw—gudgeon pin	F.4
J18	Spring washer—clamp screw	F.4
J19	Crankshaft complete (with main big-end bearings)	F.4
J20	Bearing—front	F.4
J21	Bearing—intermediate	F.4
J22	Bearing—rear	F.4
J23	Bearing—connecting rod	F.4
J24	Oil thrower—crankshaft	F.4
J25	Chain sprocket	F.4
J26	Key—chain sprocket	F.4
J27	Pulley—on crankshaft	F.4
J28	Key—crankshaft pulley	F.4
J29	Washer	F.4
J30	Nut—crankshaft	F.4
J31	Shims—nut	F.4
J32	Camshaft	F.4
J33	Chain sprocket	F.4
J34	Key—chain sprocket	F.4
J35	Bolt—camshaft	F.4
J36	Washer—chain sprocket	F.4
J37	Lock washer—chain sprocket	F.4
J38	Oil thrower—camshaft	F.4
J39	Circlip—camshaft—rear	F.4
J40	Thrust plate—camshaft	F.4

Illus. No.	Description	Page No.
J41	Bearing—camshaft—front	F.5
J42	Bearing—camshaft—rear	F.5
J43	Bearing—camshaft—intermediate	F.5
J44	Screwed dowel—bearing	F.5
J45	Plain dowel—bearing	F.5
J46	Timing chain	F.5
J47	Valve guide—inlet and exhaust	F.5
J48	Valve—inlet and exhaust	F.5
J49	Spring—valve—inner	F.5
J50	Spring—valve—outer	F.5
J51	Cap—spring—bottom	F.5
J52	Oil deflector—valve	F.5
J53	Cap—springs—top	F.5
J54	Packing ring—valve	F.5
J55	Split cotters—valve spring	F.5
J56	Support bracket—rocker-shaft	F.5
J57	Bolt—support bracket (8 mm.)	F.5
J58	Bolt—support bracket (10 mm.)	F.5
J59	Lock plate—support bracket bolts	F.5
J60	Washer—Nos. 1 and 5 brackets	F.5
J61	Washer—Nos. 2 and 3 brackets	F.5
J62	Rocker-shaft with plugs	F.5
J63	Plug—rocker-shaft	F.5
J64	Spacer spring—long—centre	F.5
J65	Spacer spring—medium—outer	F.5
J66	Spacer spring—short—front and rear	F.5
J67	Spring clip—rocker-shaft	F.5
J68	Washer—spring clip	F.5
J69	Valve rocker with bush—Nos. 4 and 8 valves	F.5
J70	Valve rocker with bush—Nos. 1 and 5 valves	F.5
J71	Bush for valve rocker (Nos. 1, 4, 5 and 8 valves)	F.5
J72	Valve rocker with bush (Nos. 2 and 6 valves)	F.6
J73	Valve rocker with bush (Nos. 3 and 7 valves)	F.6
J74	Bush for valve rocker (Nos. 2, 3, 6 and 7 valves)	F.6
J75	Adjusting screw—rocker	F.6
J76	Locknut—adjusting screw	F.6
J77	Push-rod assembly	F.6

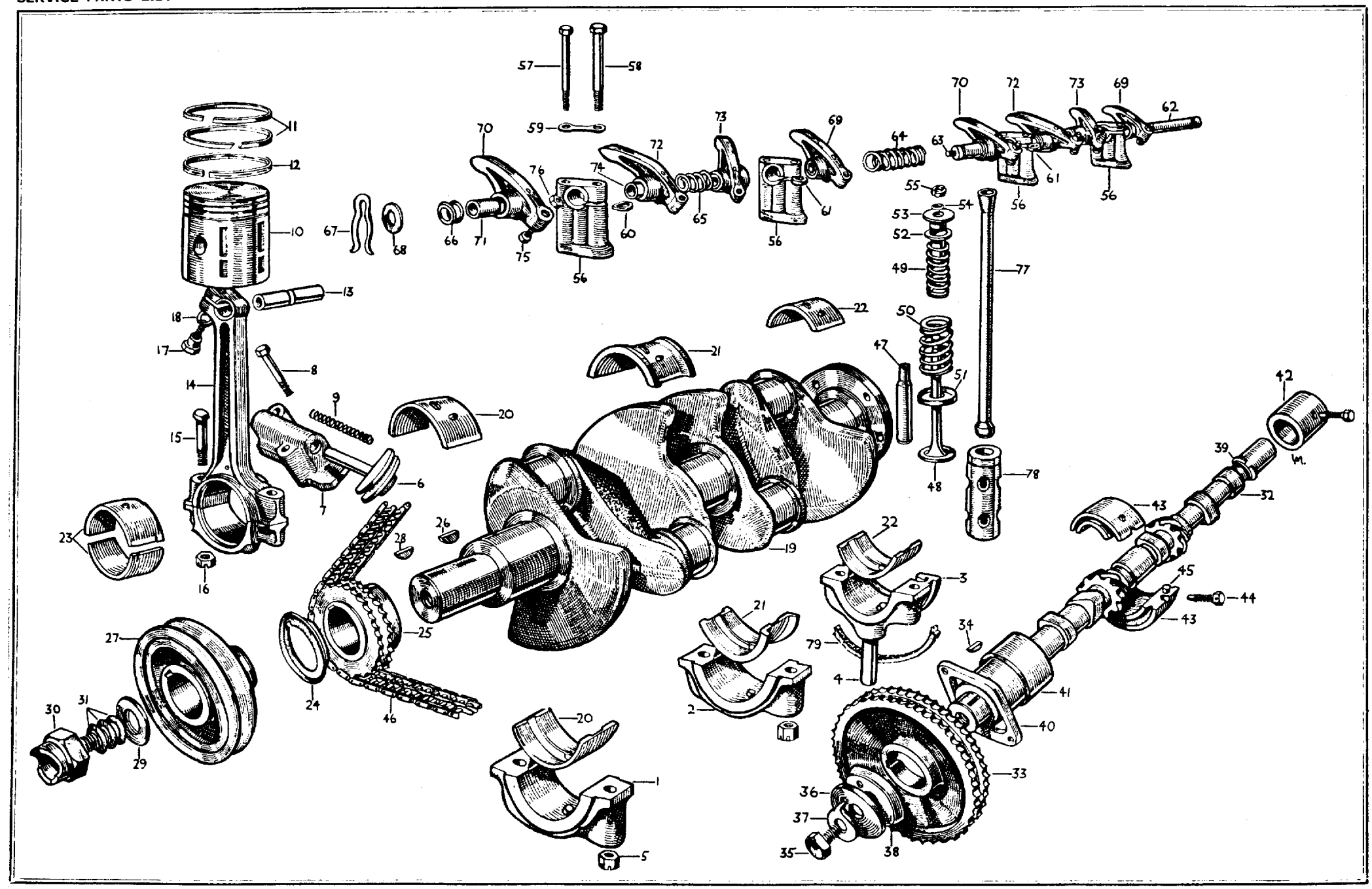
57
58
59
11
12
10
13
18
17
14
15
16
8
9
7
6
67
68
70
76
74
72
73
69
66
71
75
60
65
61
56
64
63
62
55
54
53
52
49
77
22
50
47
51
48
78
21
20
19
42
39
32
43
23
26
28
3
45
44
27
25
24
46
79
4
34
41
40
30
31
29
2
1
5
33
36
37
35
38

KEY TO PLATE K

Illus. No.	Description	Page No.
K1	Stud—water pump—short	F.2
K2	Stud—water pump—long	F.2
K3	Water pump body	G.3
K4	Spindle—water pump	G.3
K5	Rotor—water pump	G.3
K6	Taper pin—rotor	G.3
K7	Nut—spindle	G.3
K8	Washer—spindle	G.3
K9	Fan pulley	G.3
K10	Key—pulley	G.3
K11	Grease nipple	G.3
K12	Dust excluder—front	G.3
K13	Cover—front dust excluder	G.3
K14	Bearing—spindle	G.3
K15	Circlip—bearing	G.3
K16	Distance tube—bearing	G.3
K17	Dust excluder—rear—felt	G.3
K18	Cover—dust excluder—centre	G.3
K19	Cover—dust excluder—rear	G.3
K20	Circlip—spindle	G.3

Illus. No.	Description	Page No.
K21	Seal—water pump	G.3
K22	Joint—pump body to block	G.3
K23	Bolt—pump—short	G.3
K24	Nut—water pump bolt	G.3
K25	Bolt—pump—long	G.4
K26	Fan blade	G.4
K27	Fan blade (offset)	G.4
K28	Bolt—fan blade	G.4
K29	Distance-piece	G.4
K30	Drive belt—for fan and dynamo	G.4
K31	Connecting pipe—pump	G.4
K32	Hose—connecting pipe	G.4
K33	Clip (1½" dia.)—connecting pipe	G.4
K34	Thermostat	G.4
K35	Joint—thermostat	G.4
K36	Hose—by-pass pipe	G.4
K37	Clip (1¼" dia.)—by-pass hose	G.4
K38	Elbow—thermostat	G.4
K39	Screw—elbow	G.4

FAN AND WATER PUMP

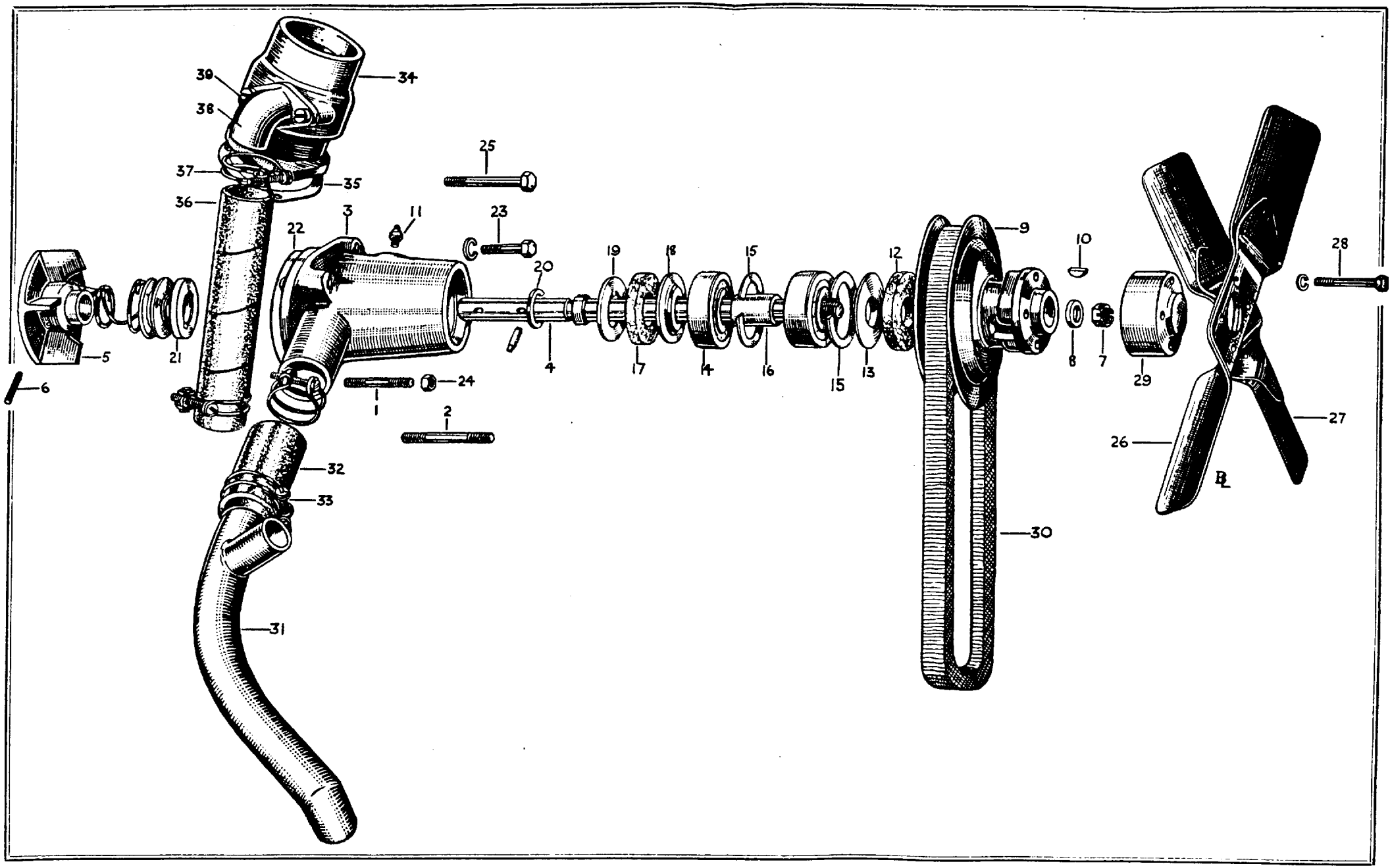

KEY TO PLATE L

Illus. No.	Description	Page
L1	Front carburetter complete	J.2
L2	Rear carburetter complete	J.2
L3	Flexible coupling assembly	J.2
L5	Bolt—coupling	J.2
L6	Nut—coupling bolt	J.2
L7	Connecting rod—jet levers	J.2
L8	Fork end—connecting rod	J.2
L9	Nut—fork end	J.2
L10	Pivot pin—fork end	J.2

Illus. No.	Description	Page
L11	Starter control	D.2
L12	Bracket—control	D.2
L13	Mixture control	D.2
L14	Accelerator pedal assembly	D.3
L15	Accelerator pedal roller	D.3
L16	Pin—pedal roller	D.3
L17	Packing—pedal	D.3
L18	Control rod—accelerator	D.2
L19	Return spring—accelerator	D.3

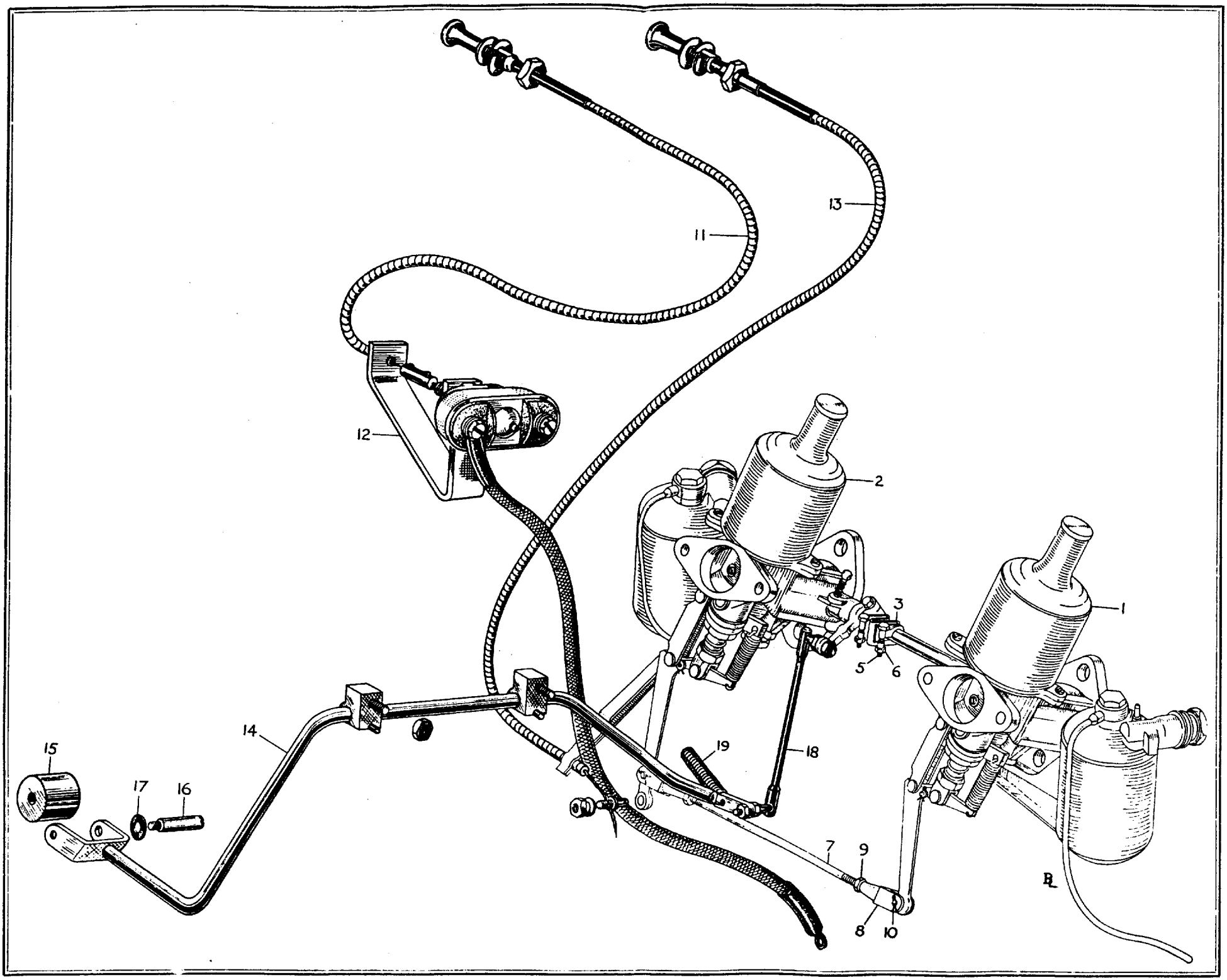
1
2
3
5
6
7
8
9
10
11
12
13
14
15
16
17
18
19
R